BRUGG
Lifting

ARCHITECTURAL ROPES

BRUGG
Lifting

Architectural ropes made of high-grade steel allow for developing creative and beautiful indoor and outdoor design solutions which blend harmoniously into the environment and always radiate airiness and aesthetics. The high-class material and design guarantees a timeless attractiveness: Let you inspire by already existing solutions on the following pages or in our picture gallery at www.brugglifting.com.

For realizing your personal designs we will be happy to assist you with our experience of many years and, if required, also with elements tailor-made according to your individual requirements. We will also be happy to provide you with hand specimens, so that you can better visualize your desired solution in detail.

Cordially, Your Brugg Lifting Team

INDEX

IMPRESSIONS	4-7
COLLECTION	8-17
WIRE ROPES	18-19
FINE LINE	20-25
MID LINE	26-29
STANDARD LINE	30-39
DO IT LINE	40-43
DECO LINE	44-49
ACCESSORIES	50-63
TIPS	64-71
ROPE CONFIGURATOR / ONLINE SHOP	72
LOCATIONS	73

STABILITY

TRANSPARENCY

VIEWS that are beautiful with every weather.

The transparency created by architectural ropes opens the visual field and the room and lets you experience a new dimension of freedom.

ELEGANCE

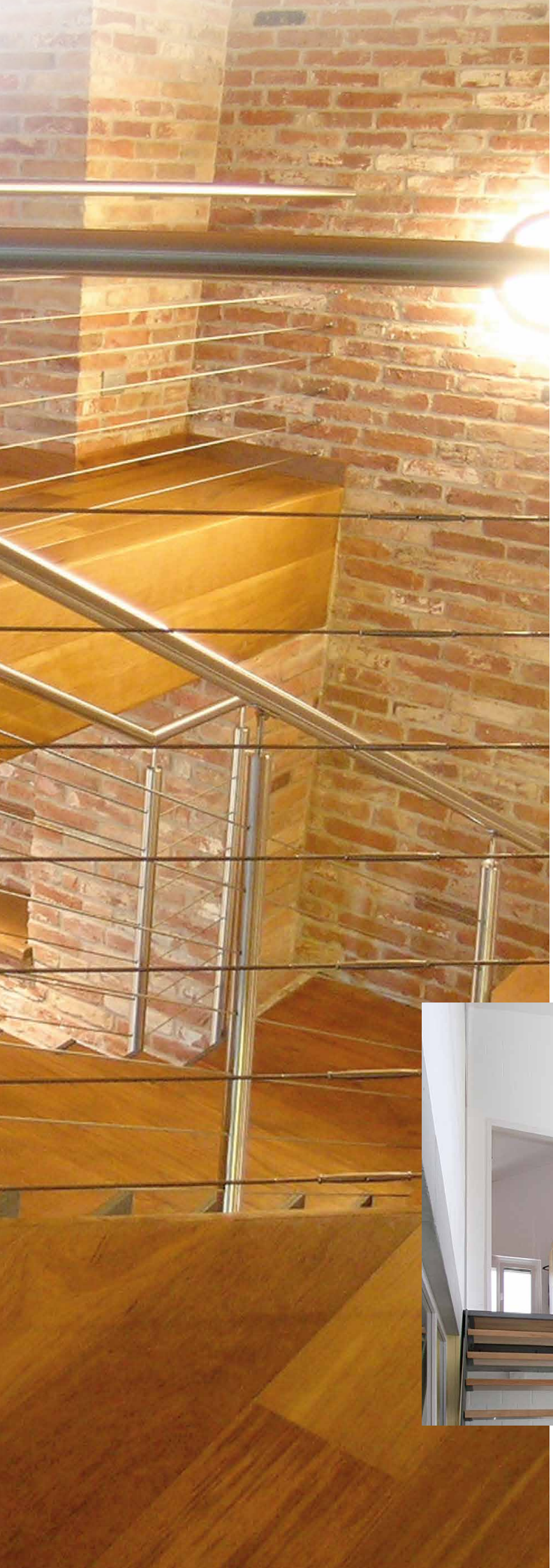

SAFETY

INSIGHTS shaped by transparency and airiness.

The plain, high-class and timeless aesthetics of architectural ropes emphasizes the room character unobtrusively and blends harmoniously into the ambience.

LIFESTYLE

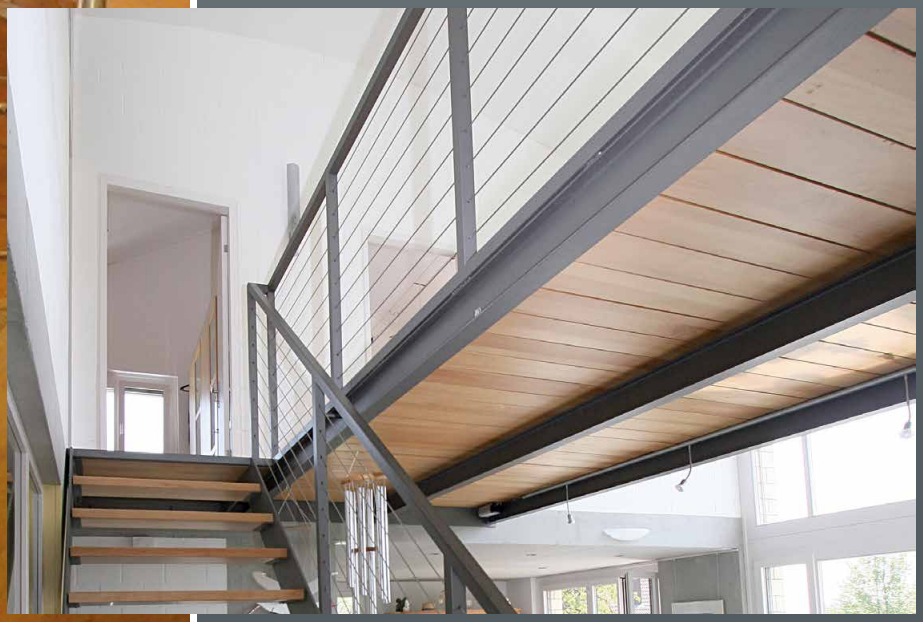

AIRINESS

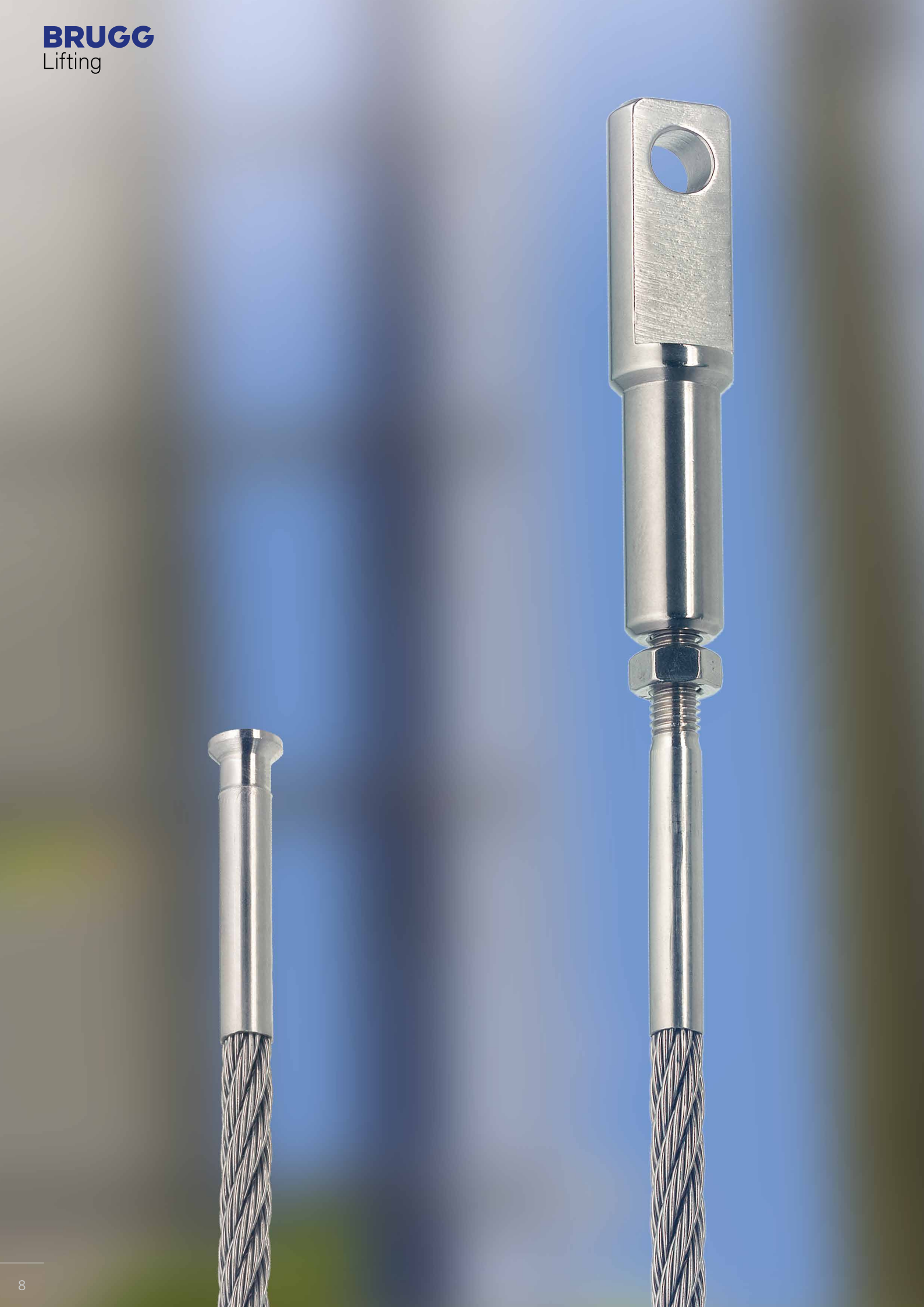

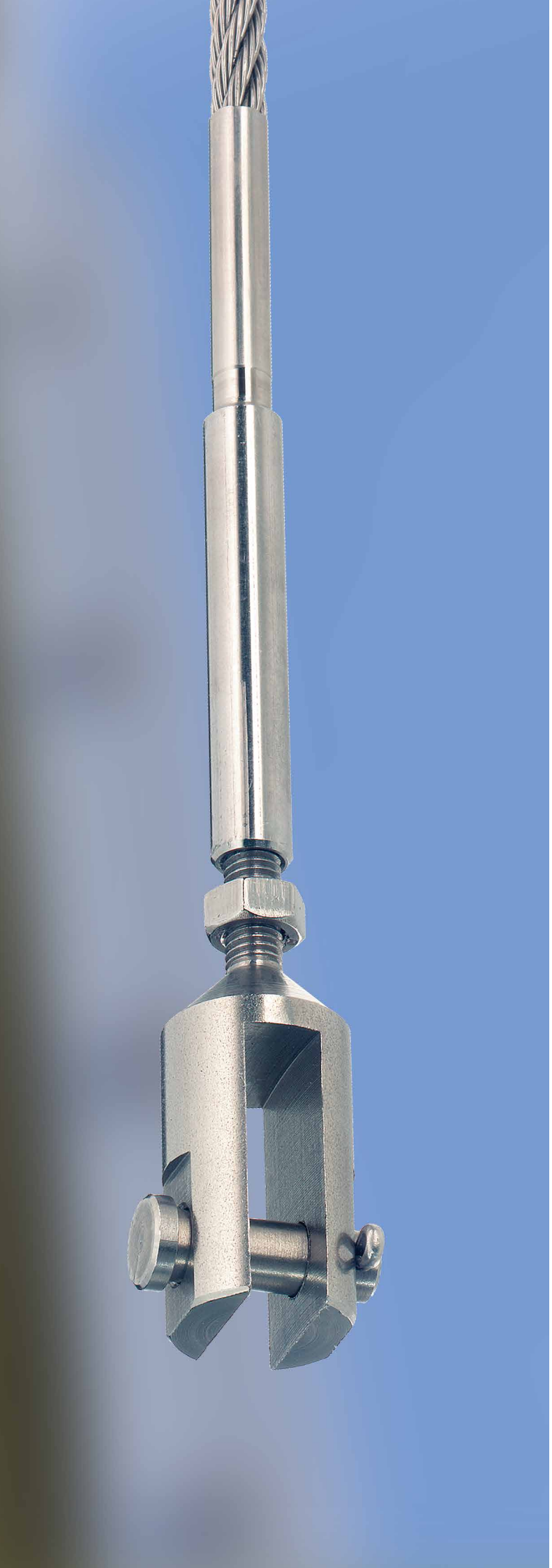

COLLECTION

Ordering is very easy:
Our collections offer you quite a number of the most popular combinations of wire ropes and fastenings. Just decide for a specific combination or collection and all you have to specify with your order is the required thickness of the wire rope and the required length.

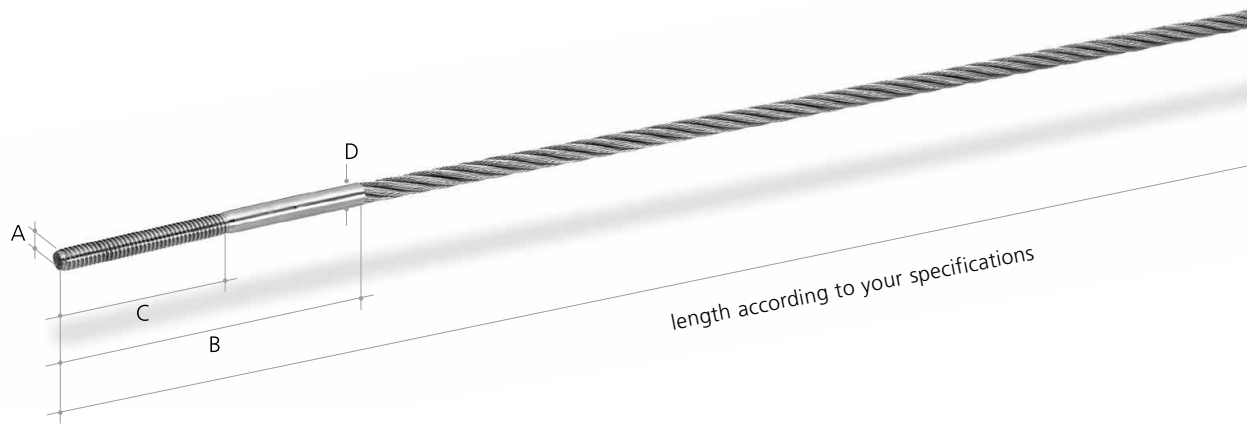

TYPE **A**

end connections: **EXTERNAL THREAD FINE LINE** on both sides, right-hand thread

type	item no. right-hand	rope ø (6 strands) in mm	dimensions in mm A	B	C	D	drill hole in mm
A-33	78233	3	M3	50	30	3,10	3,5
A-35	78235	3	M3	70	50	3,10	3,5
A-43	78243	4	M4	60	30	4,32	5,0
A-46	78246	4	M4	90	60	4,32	5,0
A-53	78253	5	M5	60	30	5,25	5,5
A-56	78256	5	M5	90	60	5,25	5,5
A-63	78263	6	M6	70	30	6,20	6,5
A-67	78267	6	M6	110	70	6,20	6,5
A-84	78284	8	M8	90	40	8,20	8,5
A-88	78288	8	M8	130	80	8,20	8,5

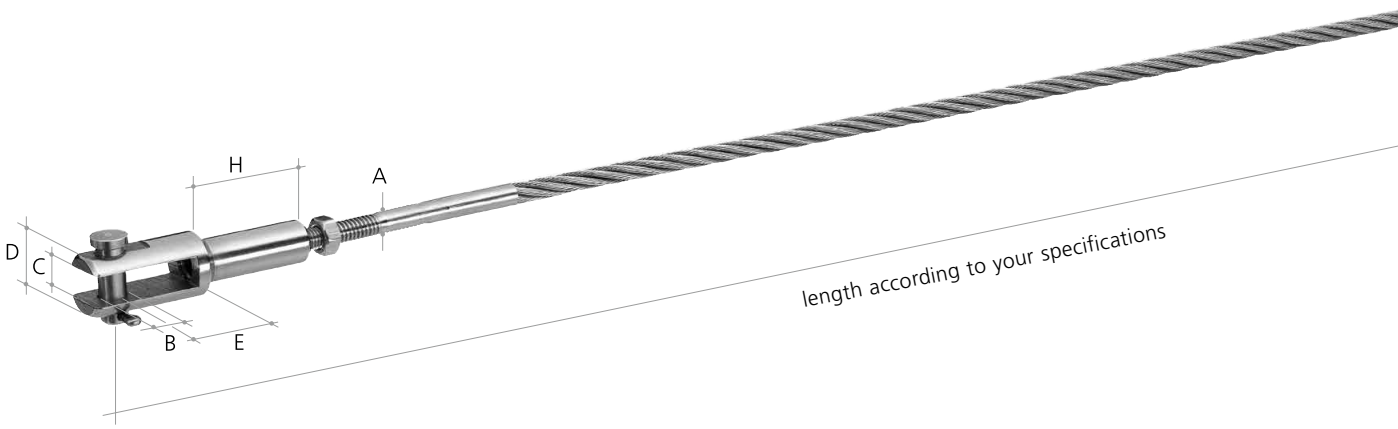

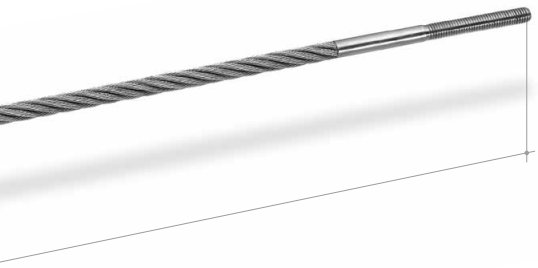

Our standardized rope collections made of **high-grade steel** can be used for many applications.
They consist of our **flexible stranded wire rope 6 x 7** + steel core and the respective **end connections**. The total length will be tailored according to your specifications.

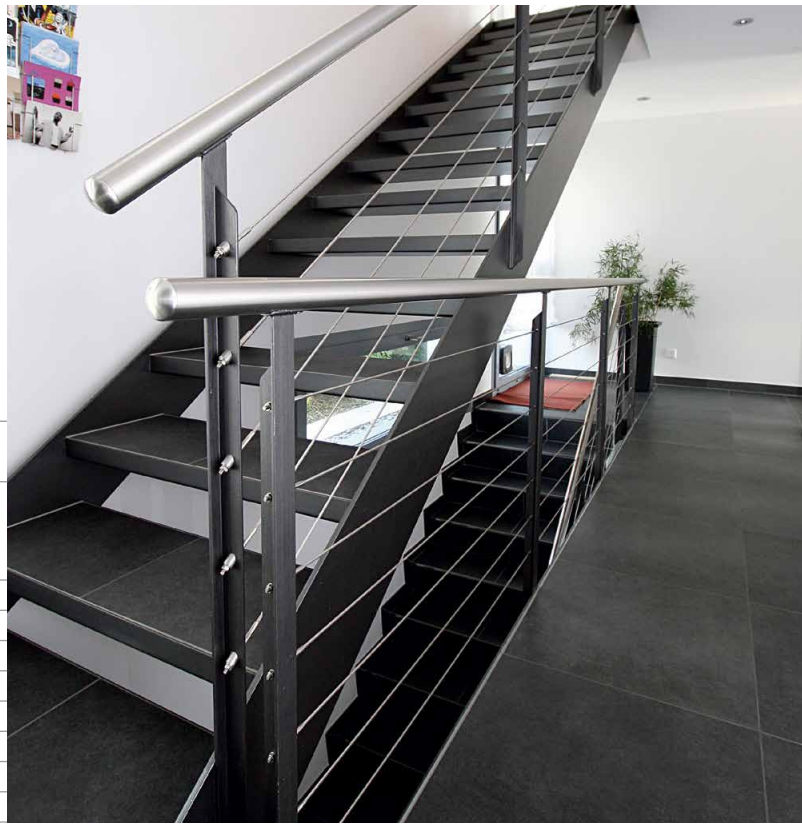

TYPE **AM**

end connections: **EXTERNAL THREAD MID LINE** on both sides, right-hand thread

type	item no. right-hand	rope ø (6 strands) in mm	dimensions in mm A	B	C	D	drill hole in mm
AM-33	72910	3	M4	54	30	4,32	5,0
AM-35	72911	3	M4	84	60	4,32	5,0
AM-43	72912	4	M5	60	30	5,25	5,5
AM-46	72913	4	M5	90	60	5,25	5,5
AM-53	72914	5	M6	66	30	6,30	7,0
AM-56	72915	5	M6	106	70	6,30	7,0
AM-63	72916	6	M8	86	40	8,20	8,5
AM-67	72917	6	M8	127	80	8,20	8,5

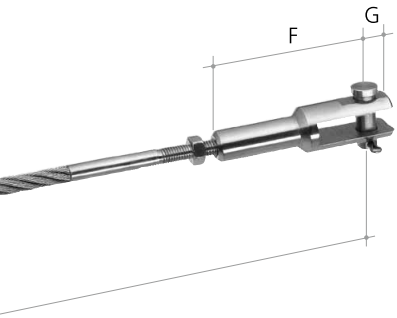

TYPE **B**

end connections: **EXTERNAL THREAD FINE LINE** on both sides, right- or left-hand, with **JAW FINE** with internal thread

type	item no.	rope ø (6 strands) in mm	dimensions in mm A	B	C	D	E	F	G	H	drill hole in mm
B-33	78333	3	M3	4,5	5,5	11	13,5	40,5	5,5	27	5,0
B-45	78345	4	M4	4,5	5,5	11	13,5	40,5	5,5	27	5,0
B-53	78353	5	M5	6,0	6,5	14	18,0	46,0	7,0	28	6,5
B-63	78363	6	M6	6,0	6,5	14	18,0	46,0	7,0	28	6,5
B-84	78384	8	M8	8,0	8,0	20	21,5	78,0	10,0	54	8,5

TYPE **BM**

end connections: **EXTERNAL THREAD MID LINE** on both sides, right- or left-hand, with **JAW FINE** with internal thread

type	item no.	rope ø (6 strands) in mm	dimensions in mm A	B	C	D	E	F	G	H	drill hole in mm
BM-33	72918	3	M4	4,5	5,5	11	13,5	40,5	5,5	27	5,0
BM-45	72919	4	M5	6,0	6,5	14	18,0	46,0	7,0	28	6,5
BM-53	72920	5	M6	6,0	6,5	14	18,0	46,0	7,0	28	6,5
BM-63	72612	6	M8	8,0	8,0	20	21,5	78,0	10,0	54	8,5

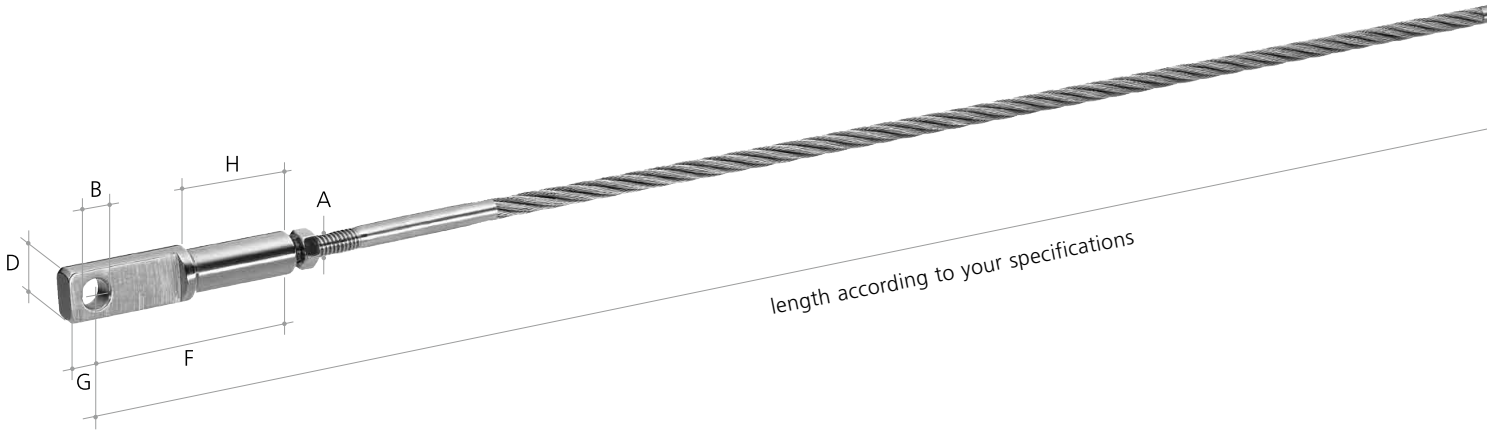

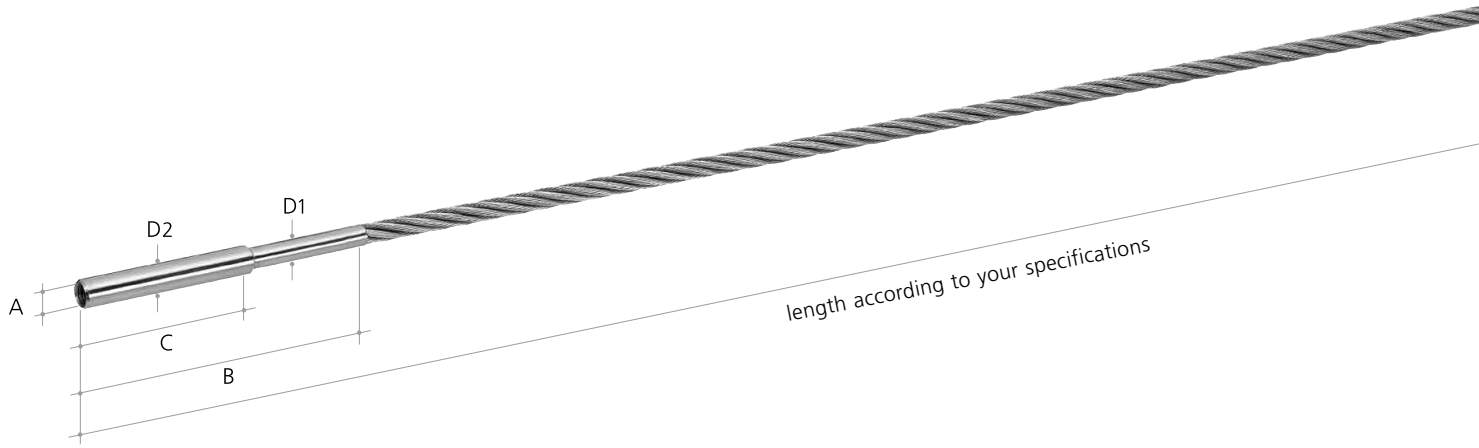

TYPE **D**

end connections: **INTERNAL THREAD FINE LINE** on both sides,
right- or left-hand

type	item no.	rope ø (6 strands) in mm	dimensions in mm					drill hole to A | to D2 in mm
			A	B	C	D1	D2	
D-43	77943	4	M4	60	30	4,20	6	4,5 | 6,5
D-54	77953	5	M5	70	35	5,45	7	5,5 | 7,5
D-65	77964	6	M6	85	45	6,40	8	6,5 | 8,5
D-86	77985	8	M8	105	55	8,50	10	8,5 |10,5

TYPE **DM**

end connections: **INTERNAL THREAD MID LINE** on both sides,
right- or left-hand

type	item no.	rope ø (6 strands) in mm	dimensions in mm					drill hole to A | to D2 in mm
			A	B	C	D1	D2	
DM-43	72926	4	M5	70	35	5,45	7	5,5 | 7,5
DM-54	72927	5	M6	85	45	6,40	8	6,5 | 8,5
DM-65	72928	6	M8	105	55	8,50	10	8,5 |10,5

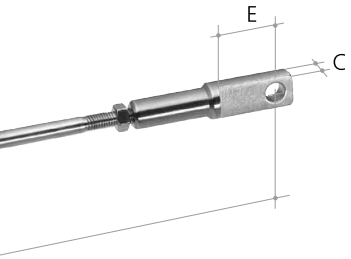

TYP **C**

end connections: **EXTERNAL THREAD FINE LINE** on both sides,
right- or left-hand with **EYE FINE** with internal thread

type	item no.	rope ø (6 strands) in mm	dimensions in mm								drill hole
			A	B	C	D	E	F	G	H	in mm
C-33	78433	3	M3	4,7	4,5	9	14,5	41,5	4,5	25	4,7
C-43	78443	4	M4	4,7	4,5	9	14,5	41,5	4,5	25	4,7
C-53	78453	5	M5	6,2	6,0	12	19,0	47,0	6,0	25	6,2
C-63	78463	6	M6	6,2	6,0	12	19,0	47,0	6,0	25	6,2
C-84	78484	8	M8	8,5	8,0	16	26,0	80,0	8,0	50	8,5

TYP **CM**

end connections: **EXTERNAL THREAD MID LINE** on both sides,
right- or left-hand with **EYE FINE** with internal thread

type	item no.	rope ø (6 strands) in mm	dimensions in mm								drill hole
			A	B	C	D	E	F	G	H	in mm
CM-33	72922	3	M4	4,7	4,5	9	14,5	41,5	4,5	25	4,7
CM-43	72923	4	M5	6,2	6,0	12	19,0	47,0	6,0	25	6,2
CM-53	72924	5	M6	6,2	6,0	12	19,0	47,0	6,0	25	6,2
CM-63	72925	6	M8	8,5	8,0	16	26,0	80,0	8,0	50	8,5

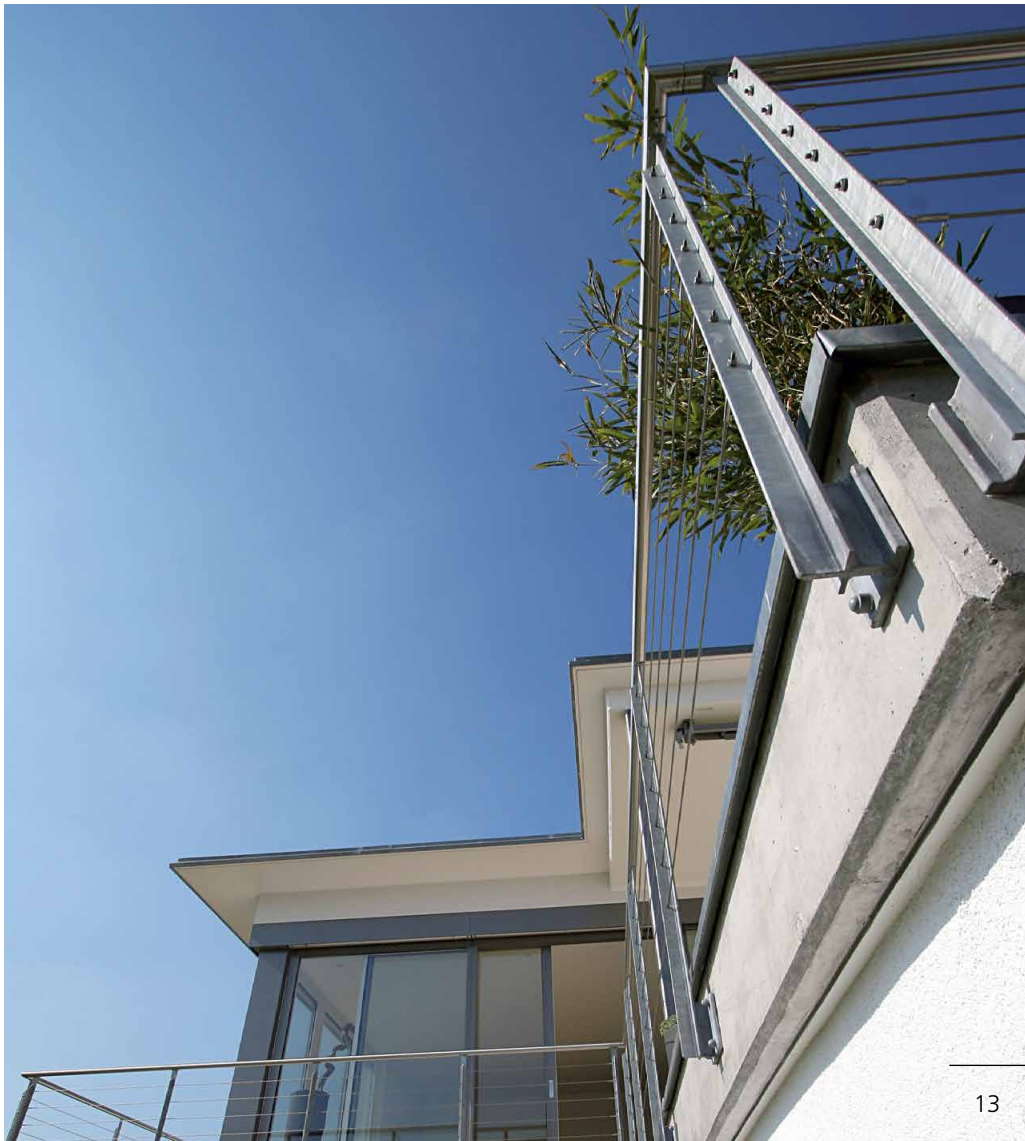

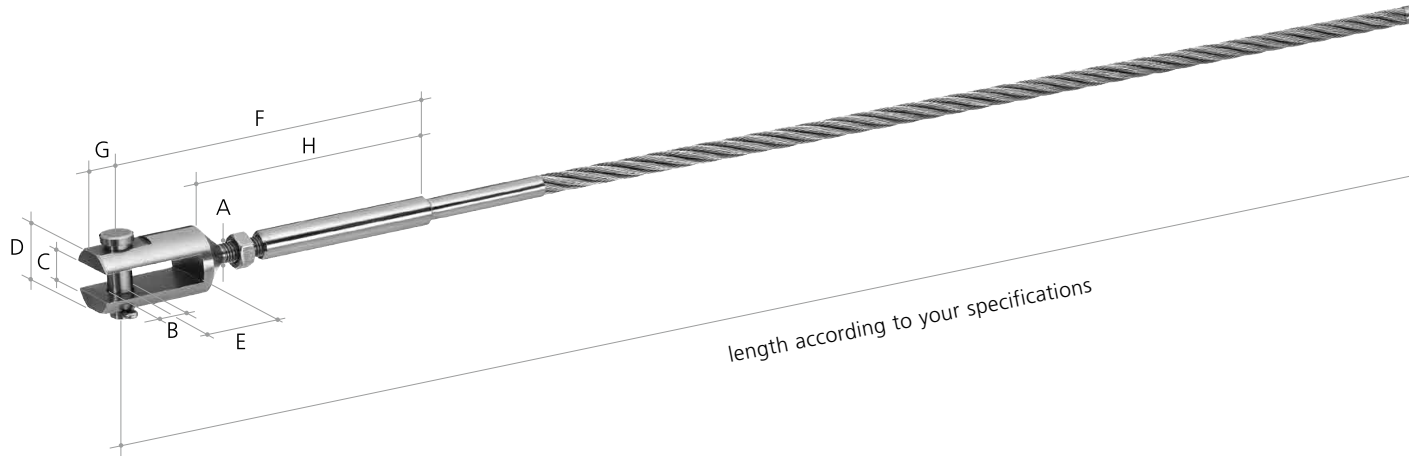
F
G
H
A
D
C
B
E
length according to your specifications

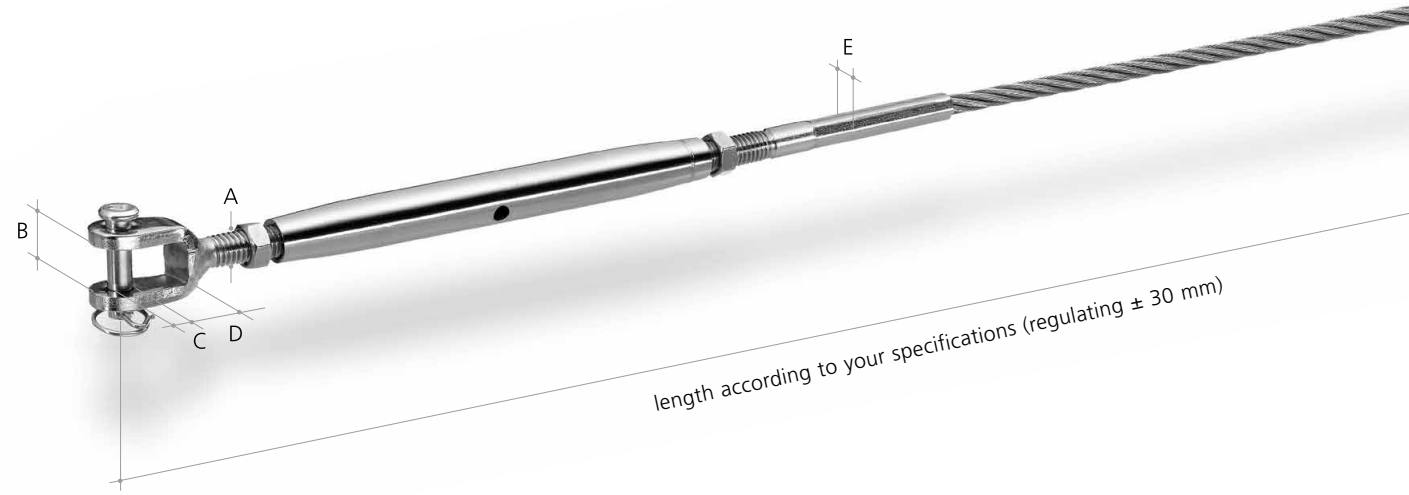
E
A
B
C
D
length according to your specifications (regulating ± 30 mm)

G
A
D
C
B
E
length according to your specifications (regulating ± 30 mm)

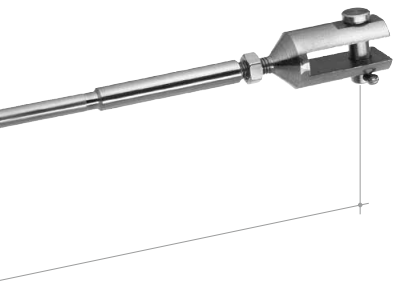

TYPE **E**

end connections: **INTERNAL THREAD FINE LINE** on both sides, right- or left-hand, with **JAW FINE LINE** with external thread

type	item no.	rope ø (6 strands) in mm	dimensions in mm								drill hole in mm
			A	B	C	D	E	F	G	H	
E-43	78043	4	M4	4,5	5,5	11	13,5	45	5,5	30	5,0
E-54	78053	5	M5	6,0	6,5	14	18,0	67	7,0	45	6,5
E-65	78064	6	M6	6,0	6,5	14	18,0	77	7,0	50	6,5
E-86	78085	8	M8	8,0	8,5	20	24,0	92	10,0	60	8,5

TYPE **EM**

end connections: **INTERNAL THREAD MID LINE** on both sides, right- or left-hand, with **JAW FINE LINE** with external thread

type	item no.	rope ø (6 strands) in mm	dimensions in mm								drill hole in mm
			A	B	C	D	E	F	G	H	
EM-43	72929	4	M5	6,0	6,5	14	18,0	67	7,0	45	6,5
EM-54	72930	5	M6	6,0	6,5	14	18,0	77	7,0	50	6,5
EM-65	72931	6	M8	8,0	8,5	20	24,0	92	10,0	60	8,5

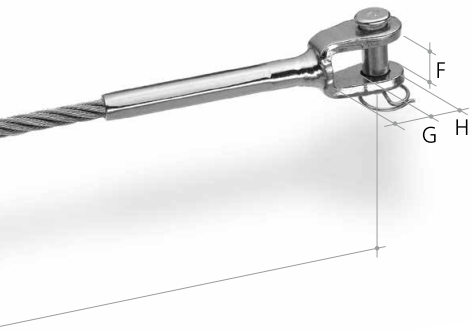

TYPE **F**

end connections: **JAW** with external thread, **TURNBUCKLE**, **EXTERNAL THREAD** hexagon swaged, and **JAW** hexagon swaged

type	item no.	rope ø (6 strands) in mm	dimensions in mm								drill hole in mm
			A	B	C	D	E	F	G	H	
F-45	78446	4	M6	8	6	9	7	10	10	6	6,5
F-56	78456	5	M8	10	8	10	8	12	11	8	8,5
F-67	78467	6	M10	12	10	11	10	14	14	10	10,5
F-88	78488	8	M12	14	12	19	13	16	19	12	15,5

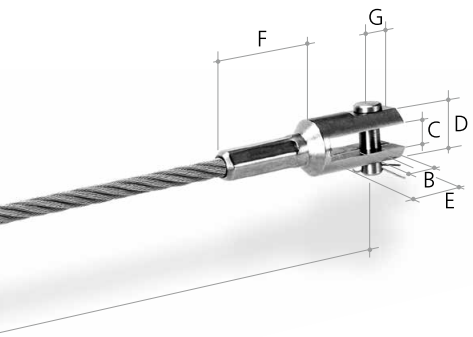

TYPE **I**

end connections: **JAW FINE LINE** with external thread, **TURNBUCKLE**, external **THREAD FINE LINE** and **JAW FINE LINE** hexagon swaged

type	item no.	rope ø (6 strands) in mm	dimensions in mm							drill hole in mm
			A	B	C	D	E	F	G	
I-43	71014	4	M4	4,5	5,5	11	13,5	27	5,5	5,0
I-53	71015	5	M5	6,0	6,5	14	18,0	28	7,0	6,5
I-63	71016	6	M6	6,0	6,5	14	18,0	28	7,0	6,5
I-84	71017	8	M8	8,0	8,5	20	24,0	54	10,0	8,5

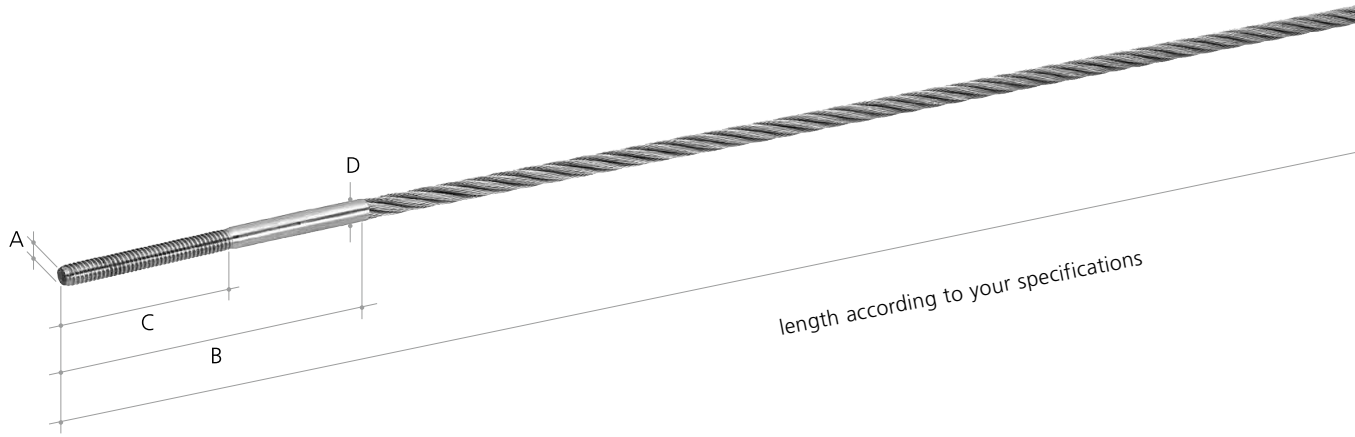

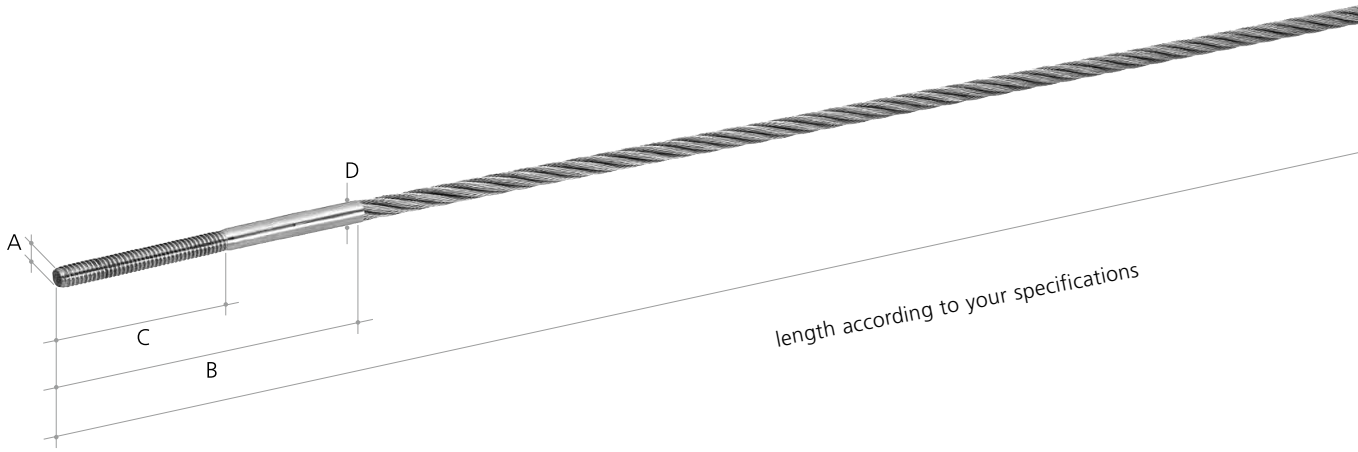

TYPE **H**

end connections: **EXTERNAL THREAD FINE LINE** right-hand
and **COUNTERSUNK HEAD FINE LINE**

type	item no. right-hand	rope ø (6 strands) in mm	dimensions in mm A	B	C	D	E	F	G	H	drill hole in mm
H-33	78423	3	M3	50	30	3,10	3,10	5,2	35	32,8	3,5
H-43	78424	4	M4	60	30	4,32	4,20	5,2	40	38,2	5,0
H-53	78425	5	M5	60	30	5,25	5,45	7,5	45	42,6	6,0
H-63	78426	6	M6	70	30	6,20	6,40	7,5	50	48,1	7,0
H-84	78428	8	M8	90	40	8,20	8,50	10,4	65	62,6	9,0

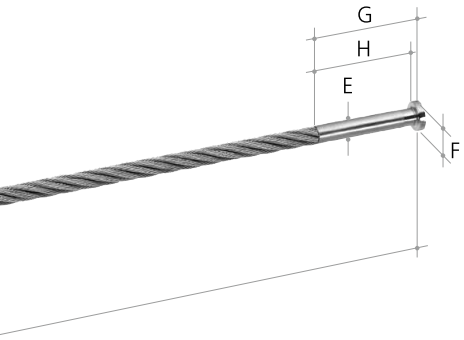

TYPE **G**

end connections: **EXTERNAL THREAD FINE LINE** right-hand
and **ROUNDED HEAD FINE LINE**

type	item no.	rope ø (6 strands)	dimensions in mm								drill hole
	right-hand	in mm	A	B	C	D	E	F	G	H	in mm
G-33	78293	3	M3	50	30	3,10	3,10	7	36	32	3,5
G-43	78294	4	M4	60	30	4,32	4,20	8	36	32	5,0
G-53	78295	5	M5	60	30	5,25	5,45	9	43	37	6,0
G-63	78296	6	M6	70	30	6,20	6,40	10	43	37	7,0
G-84	78298	8	M8	90	40	8,30	8,50	12	65	60	9,0

TYPE **GM**

end connections: **EXTERNAL THREAD MID LINE** right-hand
and **ROUNDED HEAD MID LINE**

type	item no.	rope ø (6 strands)	dimensions in mm								drill hole
	right-hand	in mm	A	B	C	D	E	F	G	H	in mm
GM-33	72932	3	M4	54	30	4,32	4,10	8	28,1	24,1	5,0
GM-43	72933	4	M5	60	30	5,25	5,45	9	30,8	24,6	6,0
GM-53	72934	5	M6	66	30	6,30	6,40	10	38,9	32,9	7,0
GM-63	72935	6	M8	86	40	8,20	8,50	12	49,4	44,4	9,0

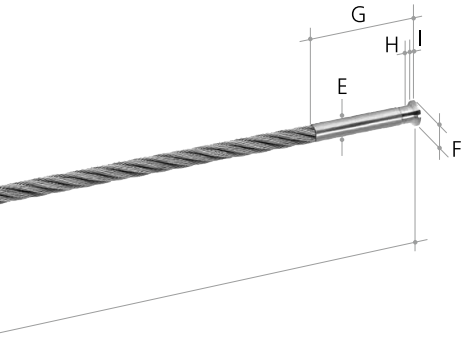

TYPE **HM**

end connections: **EXTERNAL THREAD MID LINE** right-hand
and **COUNTERSUNK HEAD MID LINE**

type	item no.	rope ø (6 strands)	dimensions in mm									drill hole
	right-hand	in mm	A	B	C	D	E	F	G	H	I	in mm
H-33	72936	3	M4	54	30	4,32	4,10	5,2	26,9	1,2	0,6	5,0
H-43	72937	4	M5	60	30	5,25	5,45	7,5	28,9	1,2	1,2	6,0
H-53	72938	5	M6	66	30	6,30	6,40	7,5	37,0	1,2	0,8	7,0
H-63	72939	6	M8	86	40	8,20	8,50	10,4	45,6	1,2	1,2	9,0

Made in
Switzerland

SPIRAL ROPES

item no.	rope ø in mm	structure/ number of wires	calculated tensile strength in kN	calculated tensile strength in t	min. tensile strength in kN	min. tensile strength in t	weight 100 m in kg	drill hole in mm
36781	0,62	7	0,4	0,04	0,37	0,04	0,2	1,0
04176	1	19	1,1	0,11	1,00	0,10	0,5	1,5
04177	1,5	19	2,4	0,24	2,20	0,22	1,1	2,0
04179	2	19	4,0	0,41	3,80	0,39	2,0	2,5
04180	2,5	19	6,0	0,61	5,80	0,59	3,1	3,0
04181	3	19	9,0	0,92	8,40	0,86	4,2	3,5
04182	4	19	15,0	1,53	14,00	1,43	7,4	4,5
29002	5	19	24,0	2,45	22,00	2,24	13,0	5,5
29274	6	19	33,0	3,37	31,00	3,16	18,0	6,5
40049	8	19	57,0	5,81	52,00	5,30	32,0	8,5

STRANDED WIRE ROPES 6x7

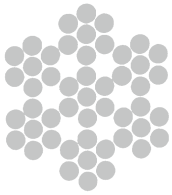

item no.	rope ø in mm	structure/ number of wires	calculated tensile strength in kN	calculated tensile strength in t	min. tensile strength in kN	min. tensile strength in t	weight 100 m in kg	drill hole in mm
21460	1	6 x 7 / 42	0,6	0,06	0,5	0,05	0,4	1,5
04186	1,5	6 x 7 / 42	1,6	0,16	1,4	0,14	0,8	2,0
04187	2	6 x 7 / 42	2,9	0,30	2,4	0,24	1,5	2,5
04189	2,5	6 x 7 / 42	4,3	0,44	3,6	0,37	2,2	3,0
04190	3	6 x 7 / 42	6,2	0,63	5,2	0,53	3,1	3,5
04194	4	6 x 7 / 42	10,9	1,11	9,1	0,93	5,5	4,5
04196	5	6 x 7 / 42	16,0	1,63	13,0	1,33	8,4	5,5
04197	6	6 x 7 / 42	24,0	2,45	19,0	1,94	13,0	6,5
29003	8	6 x 7 / 42	45,0	4,59	38,0	3,88	23,0	8,5

Also suitable for FINE LINE and MID LINE.

STRANDED WIRE ROPES 6x19 / 6X36

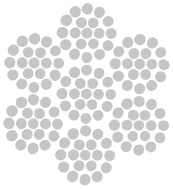

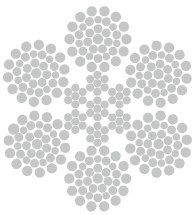

item no.	rope ø in mm	structure/ number of wires	calculated tensile strength in kN	calculated tensile strength in t	min. tensile strength in kN	min. tensile strength in t	weight 100 m in kg	drill hole in mm
61689	1,5	6 x 19 / 114	1,3	0,13	1,0	0,10	1,0	2,0
61596	2	6 x 19 / 114	2,3	0,23	2,0	0,20	1,5	2,5
04188	2,5	6 x 19 / 114	4,1	0,42	3,4	0,35	2,1	3,0
04191	3	6 x 19 / 114	7,3	0,74	5,8	0,59	3,6	3,5
04193	4	6 x 19 / 114	11,4	1,16	9,3	0,95	5,6	4,5
04195	5	6 x 19 / 114	16,0	1,63	12,0	1,22	8,1	5,5
04199	6,5	6 x 19 / 114	28,0	2,86	23,0	2,35	15,0	7,0
04200	8	6 x 19 / 114	44,0	4,49	36,0	3,67	23,0	8,5
04202	9	6 x 36 / 216	61,0	6,22	50,0	5,10	32,0	9,5
61210	10	6 x 36 / 216	72,0	7,34	56,0	5,71	42,0	10,5
07578	11	6 x 36 / 216	87,0	8,87	71,0	7,24	46,0	11,5
61211	12	6 x 36 / 216	105,0	10,71	82,0	8,36	56,0	12,5
21600	13	6 x 36 / 216	124,0	12,65	101,0	10,30	65,0	13,5
61212	14	6 x 36 / 216	143,0	14,59	112,0	11,42	73,0	14,5
61213	16	6 x 36 / 216	187,0	19,07	146,0	14,80	98,0	16,5

high-grade steel wire ropes with steel core, stainless steel type AISI 316 (1.4401)

FINE LINE

Synonym for innovation and elegance when it comes to designing the end of a wire rope assembly – that is **FINE LINE**. Due to a patented process it is possible to keep the connection of the **FINE LINE** pieces to the rope as slim as the rope itself.
This way you will always gain: in shapeliness, creative freedom and individuality.
FINE LINE is unique – and the right system for everybody for whom beauty always is a matter of details as well.

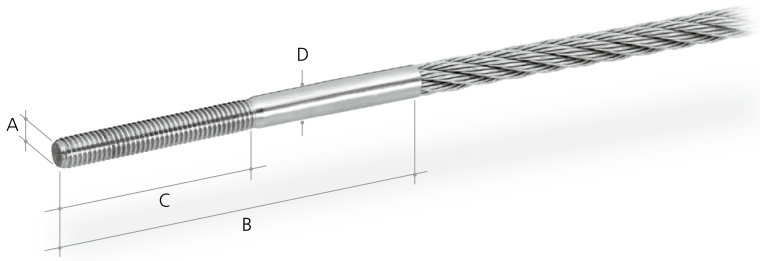

EXTERNAL THREAD FINE LINE round-pressed

item no. right-hand	item no. left-hand	rope ø (6 strands) in mm	dimensions in mm A	B	C	D	min. tensile strength in kN	drill hole in mm
62600	62601	3	M3	50	30	3,10	3,5	3,5
62602	62603	3	M3	70	50	3,10	3,5	3,5
62604	62605	4	M4	60	30	4,32	6,5	5,0
62606	62607	4	M4	90	60	4,32	6,5	5,0
62608	62609	5	M5	60	30	5,25	10,0	5,5
62610	62611	5	M5	90	60	5,25	10,0	5,5
62612	62613	6	M6	70	30	6,20	14,2	6,5
62614	62615	6	M6	110	70	6,20	14,2	6,5
62616	62617	8	M8	90	40	8,20	26,4	8,5
62618	62619	8	M8	130	80	8,20	26,4	8,5

material: 1.4301

Only in connection with stranded rope 6x7
European patent 0777067

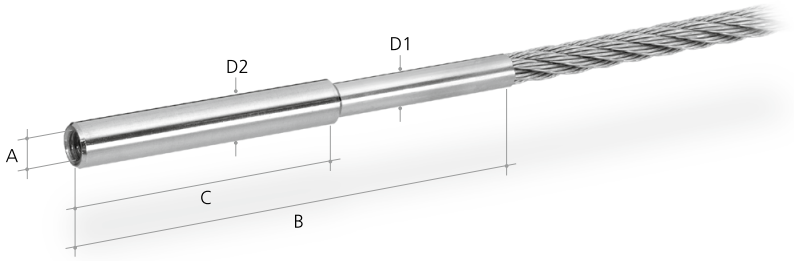

INTERNAL THREAD FINE LINE round-pressed

item no. right-hand	item no. left-hand	rope ø (6 strands) in mm	dimensions in mm A	B	C	D1	D2	min. tensile strength in kN	drill hole to A | to D2 in mm
78354	78364	4	M4	60	30	4,20	6	6,5	4,5 | 6,5
78355	78365	5	M5	70	35	5,45	7	10,0	5,5 | 7,5
78356	78366	6	M6	85	45	6,40	8	14,2	6,5 | 8,5
78358	78368	8	M8	105	55	8,50	10	26,4	8,5 | 10,5

material: 1.4301

Only in connection with stranded rope 6x7

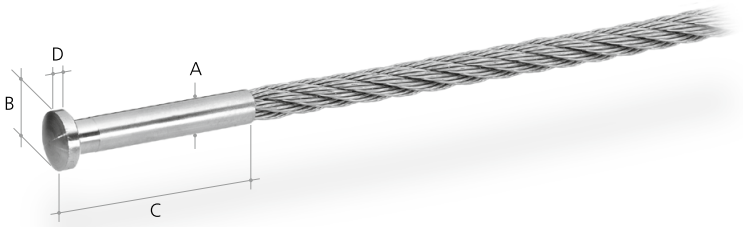

ROUNDED HEAD FINE LINE round-pressed

item no.	rope ø (6 strands) in mm	dimensions in mm A	B	C	D	min. tensile strength in kN	drill hole in mm
78555	3	3,10	7	36	4	4,1	3,5
78556	4	4,20	8	36	4	7,2	4,5
78557	5	5,45	9	43	6	10,4	6,5
78558	6	6,40	10	43	6	15,2	7,0
78559	8	8,50	12	65	5	30,4	9,0

material: 1.4301 Only in connection with stranded rope 6x7

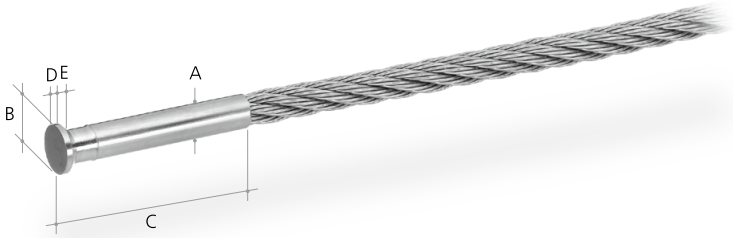

COUNTERSUNK HEAD FINE LINE round-pressed

item no.	rope ø (6 strands) in mm	dimensions in mm A	B	C	D	E	min. tensile strength in kN	drill hole in mm
78550	3	3,10	5,2	35	1,2	1,0	4,1	3,5
78551	4	4,20	5,2	40	1,2	0,6	7,2	4,5
78552	5	5,45	7,5	45	1,2	1,15	10,4	6,0
78553	6	6,40	7,5	50	1,2	0,75	15,2	7,0
78554	8	8,50	10,4	65	1,2	1,2	30,4	9,0

material: 1.4301 Only in connection with stranded rope 6x7

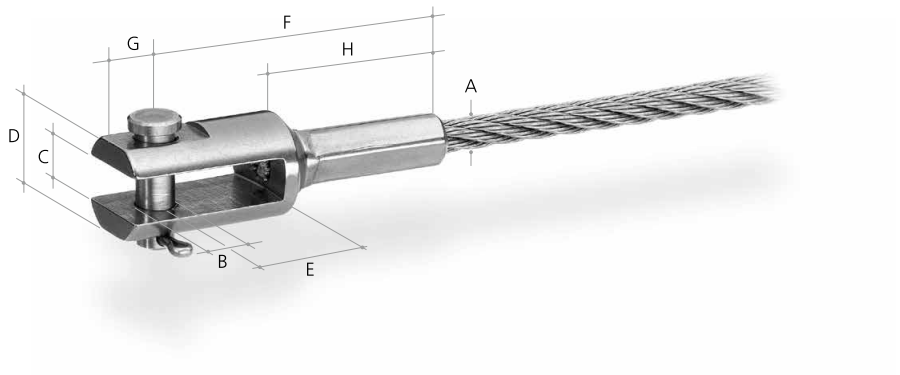

JAW FINE LINE hexagon swaged

item no.	rope ø (6 strands) in mm	dimensions in mm A	B	C	D	E	F	G	H	min. tensile strength in kN	drill hole in mm
63500	3	3	4,5	5,5	11	13,5	40,5	5,5	27	4,1	5,0
63501	4	4	4,5	5,5	11	13,5	40,5	5,5	27	7,2	5,0
63502	5	5	6,0	6,5	14	18,0	46,0	7,0	28	10,4	6,5
63503	6	6	6,0	6,5	14	18,0	46,0	7,0	28	15,2	6,5
63504	8	8	8,0	8,5	20	24,0	78,0	10,0	54	30,4	8,5

material: 1.4305 Only in connection with stranded rope 6x7

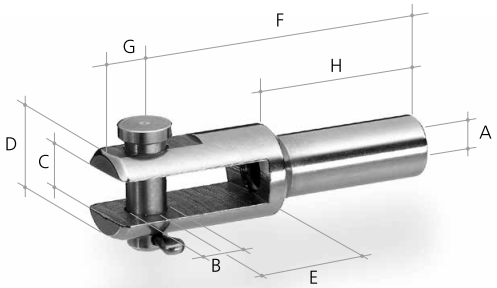

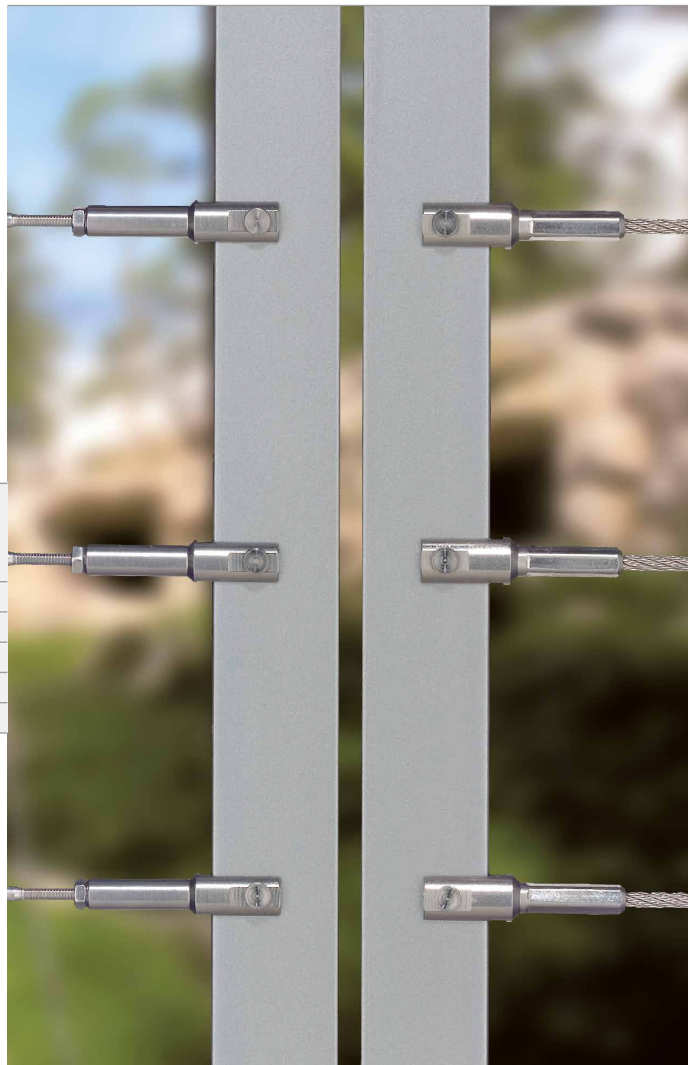

JAW FINE LINE with internal thread

item no. right-hand	item no. left-hand	thread in mm A	dimensions in mm B	C	D	E	F	G	H	drill hole in mm
49376	49377	M3	4,5	5,5	11	13,5	40,5	5,5	27	5,0
49378	49379	M4	4,5	5,5	11	13,5	40,5	5,5	27	5,0
49380	49381	M5	6,0	6,5	14	18,0	46,0	7,0	28	6,5
49382	49383	M6	6,0	6,5	14	18,0	46,0	7,0	28	6,5
49384	49385	M8	8,0	8,0	20	24,0	78,0	10,0	54	8,5

material: 1.4305

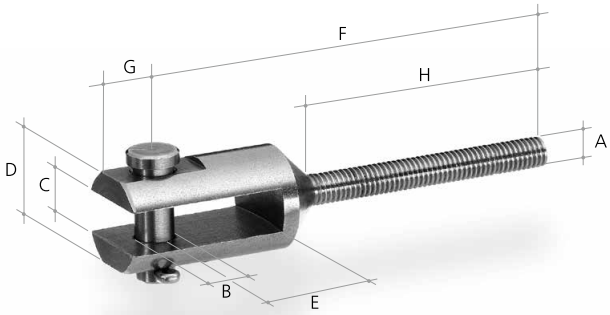

JAW FINE LINE with external thread

item no. right-hand	item no. left-hand	thread in mm A	dimensions in mm B	C	D	E	F	G	H	drill hole in mm
63505	63506	M3	4,5	5,5	11	13,5	45	5,5	30	5,0
63507	63508	M4	4,5	5,5	11	13,5	45	5,5	30	5,0
63509	63510	M5	6,0	6,5	14	18,0	67	7,0	45	6,5
63511	63512	M6	6,0	6,5	14	18,0	77	7,0	50	6,5
63513	63514	M8	8,0	8,5	20	24,0	92	10	60	8,5

material: 1.4305

EYE TERMINAL FINE LINE with internal thread

item no. right-hand	item no. left-hand	thread in mm A	dimensions in mm B	C	D	E	F	G	H	drill hole in mm
49386	49387	M3	4,7	4,5	9	14,5	41,5	4,5	25	4,7
49388	49389	M4	4,7	4,5	9	14,5	41,5	4,5	25	4,7
49390	49391	M5	6,2	6,0	12	19,0	47,0	6,0	25	6,2
49392	49393	M6	6,2	6,0	12	19,0	47,0	6,0	25	6,2
49394	49395	M8	8,5	8,0	16	26,0	80,0	8,0	50	8,5

material: 1.4305

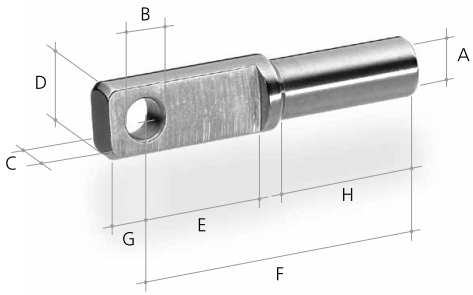

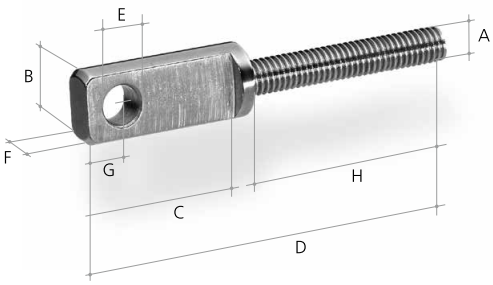

EYE TERMINAL FINE LINE with external thread

item no. right-hand	thread in mm A	rope ø in mm	dimensions in mm B	C	D	E	F	G	H	drill hole in mm
78542	M5	4	12	14	55	4,7	4,5	5,5	34	4,7
78549	M8	5-6	16	18,5	62	16,2	5,5	7,0	37	6,2

material: 1.4305

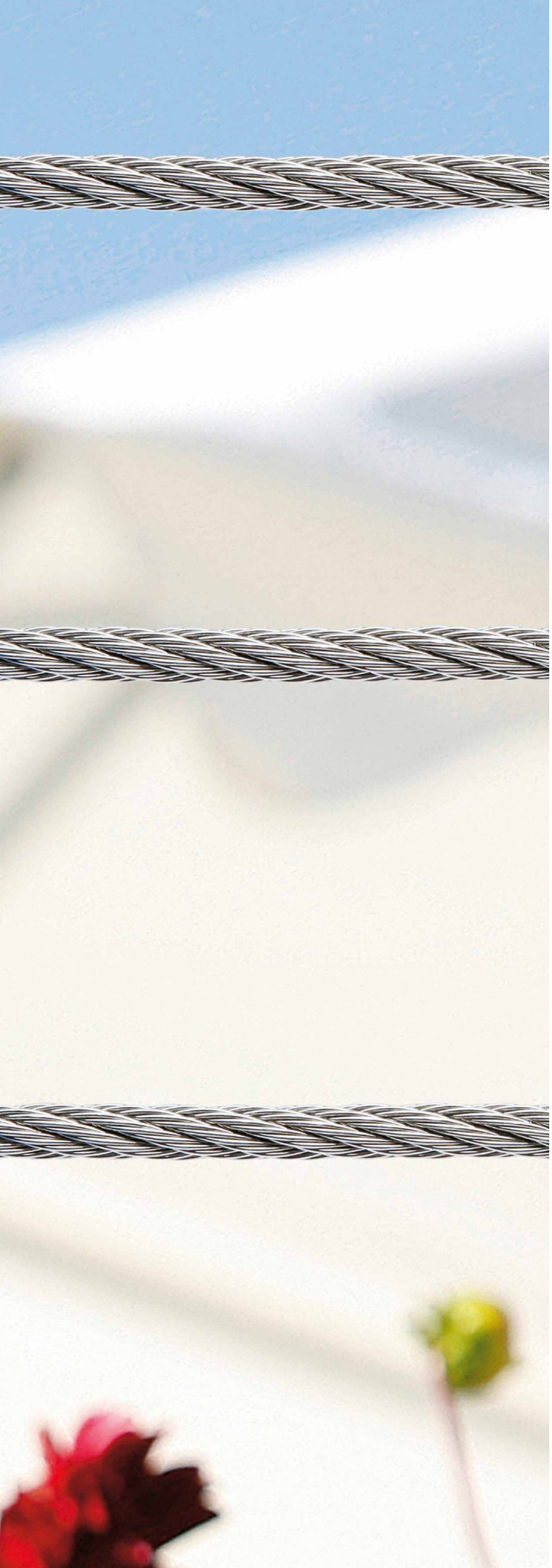

MID LINE

The aesthetics of FINE LINE and the outstanding loading capacity of STANDARD LINE make a perfect match in the new **MID LINE** series.
The functional construction of **MID LINE** extends the scope for the individual and creative design of your living spaces.

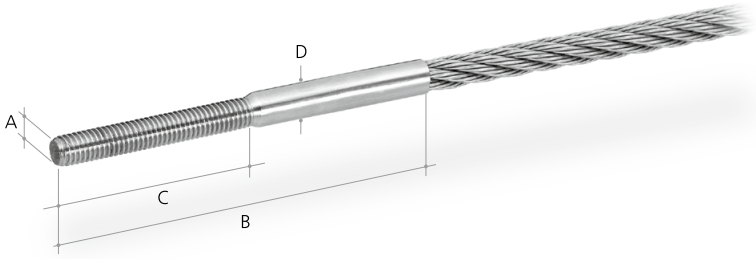

EXTERNAL THREAD MID LINE round-pressed

item no. right-hand	item no. left-hand	rope ø (6 strands) in mm	dimensions in mm A	B	C	D	min. tensile strength in kN	drill hole in mm
62604	62605	3	M4	54	30	4,32	4,7	5,0
62606	62607	3	M4	84	60	4,32	4,7	5,0
62608	62609	4	M5	60	30	5,25	8,2	5,5
62610	62611	4	M5	90	60	5,25	8,2	5,5
62612	62613	5	M6	66	30	6,30	11,7	7,0
62614	62615	5	M6	106	70	6,30	11,7	7,0
62616	62617	6	M8	86	40	8,20	17,1	8,5
62618	62619	6	M8	127	80	8,20	17,1	8,5

material: 1.4301 Only in connection with stranded rope 6x7

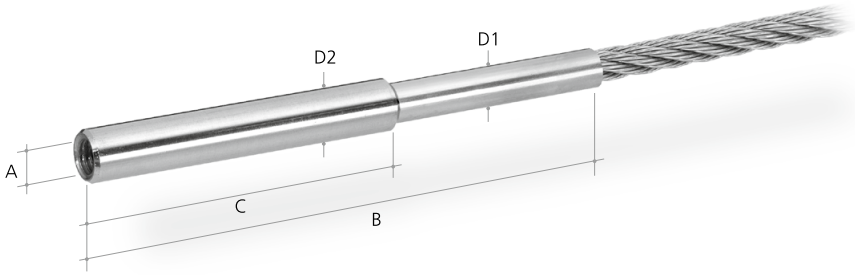

INTERNAL THREAD MID LINE round-pressed

item no. right-hand	item no. left-hand	rope ø (6 strands) in mm	dimensions in mm A	B	C	D1	D2	min. tensile strength in kN	drill hole to A | to D2 in mm
78355	78365	4	M5	70	35	5,45	7	8,2	5,5 | 7,5
78356	78366	5	M6	85	45	6,40	8	11,7	6,5 | 8,5
78358	78368	6	M8	105	55	8,50	10	17,1	8,5 |10,5

material: 1.4301 Only in connection with stranded rope 6x7

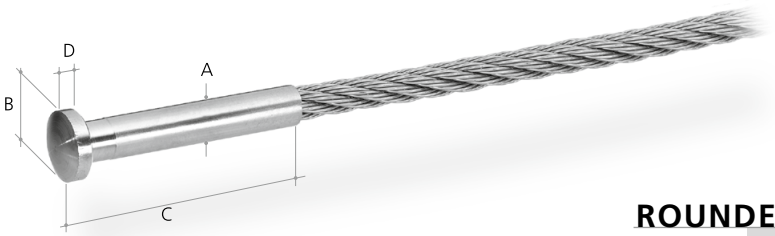

ROUNDED HEAD MID LINE round-pressed

item no.	rope ø (6 strands) in mm	dimensions in mm A	B	C	D	min. tensile strength in kN	drill hole in mm
78556	3	4,20	8	28,1	4	4,7	4,5
78557	4	5,45	9	30,8	6	8,2	6,0
78558	5	6,40	10	38,9	6	11,7	7,0
78559	6	8,50	12	49,4	5	17,1	9,0

material: 1.4301 Only in connection with stranded rope 6x7

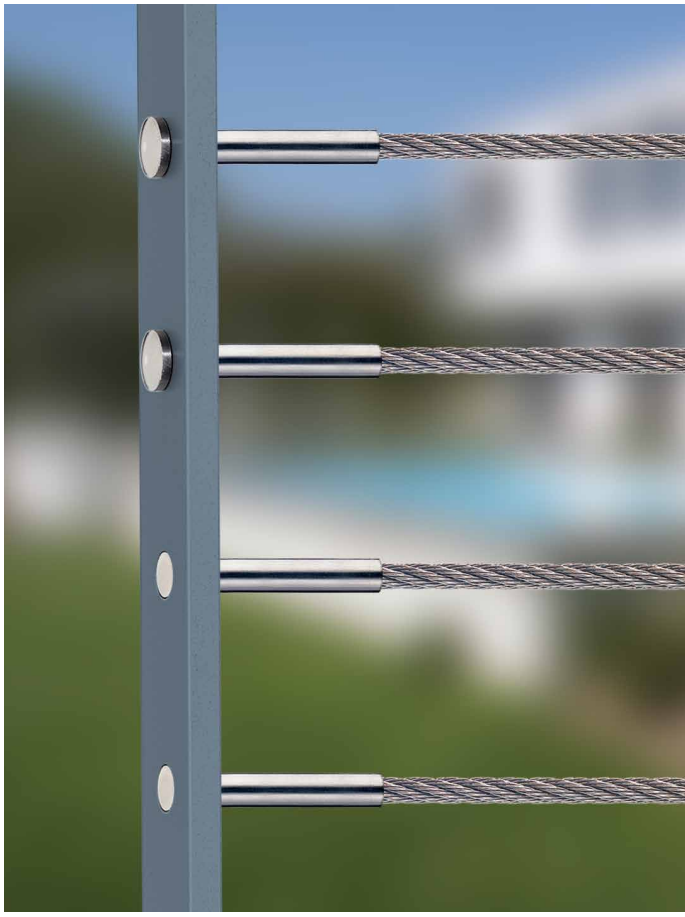

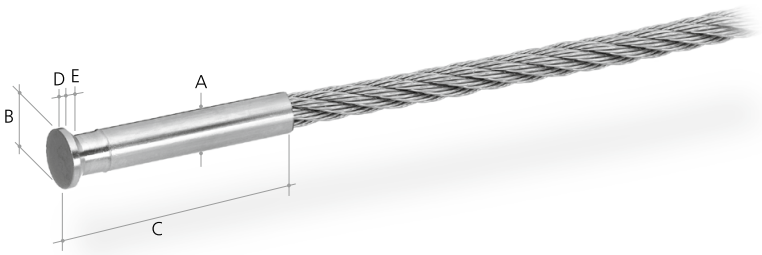

COUNTERSUNK HEAD MID LINE round-pressed

item no.	rope ø (6 strands) in mm	dimensions in mm A	B	C	D	E	min. tensile strength in kN	drill hole in mm
78551	3	4,10	5,2	26,9	1,2	0,6	4,7	4,5
78552	4	5,45	7,5	28,9	1,2	1,2	8,2	6,0
78553	5	6,40	7,5	37,0	1,2	0,8	11,7	7,0
78554	6	8,50	10,4	45,6	1,2	1,2	17,1	9,0

material: 1.4301 Only in connection with stranded rope 6x7

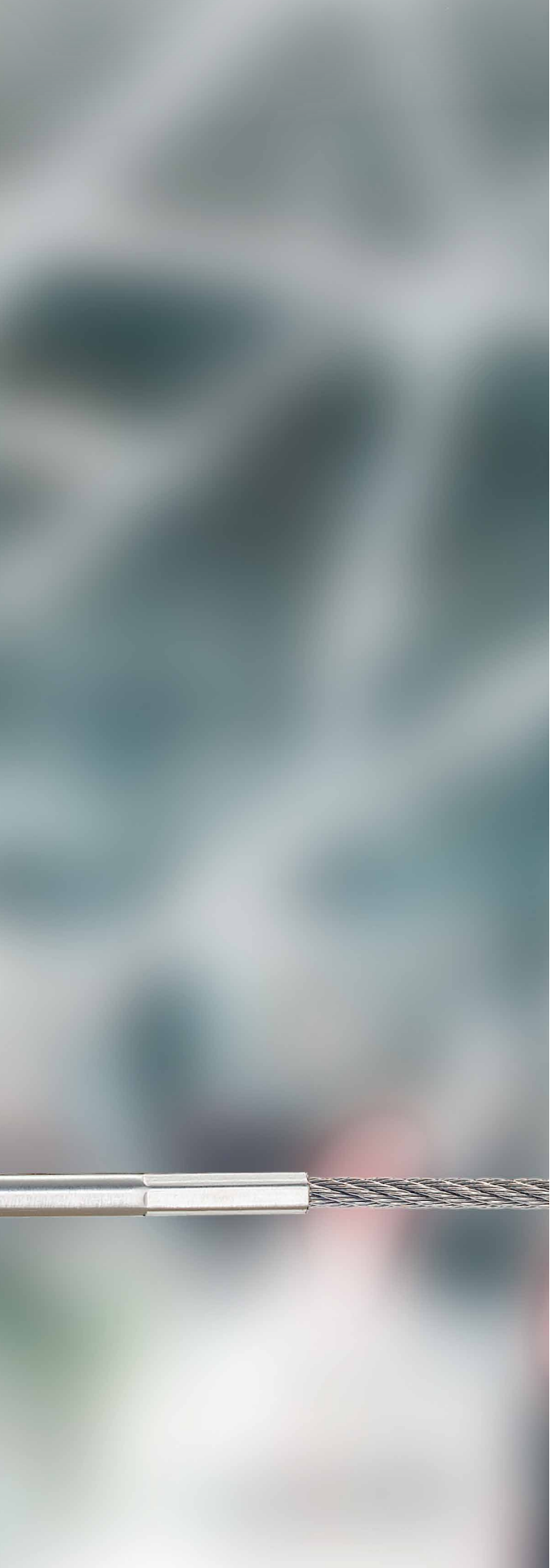

STANDARD LINE

Within our **STANDARD LINE** we offer well-proven products that combine value for money and functionality in an ideal way radiating an attractive maritime aesthetics.
The vast number of different elements of this line which, despite of their technical design looks, are not limited to classical applications enable you to solve various design and layout problems.

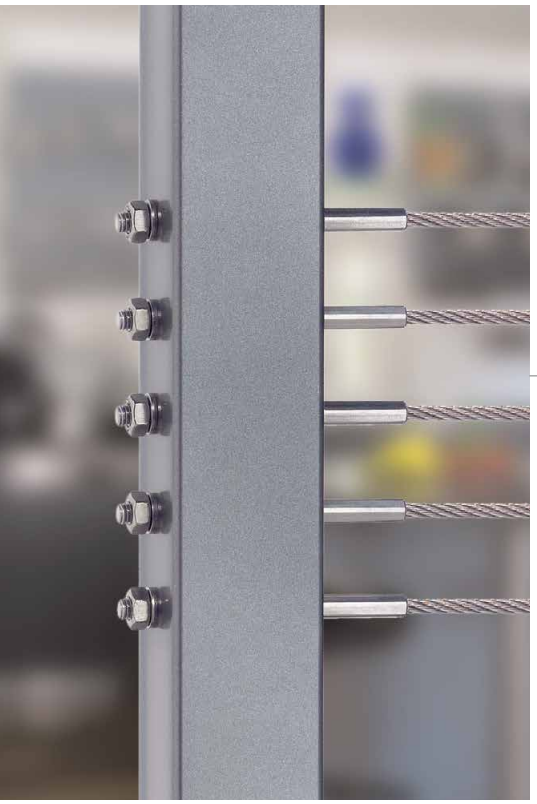

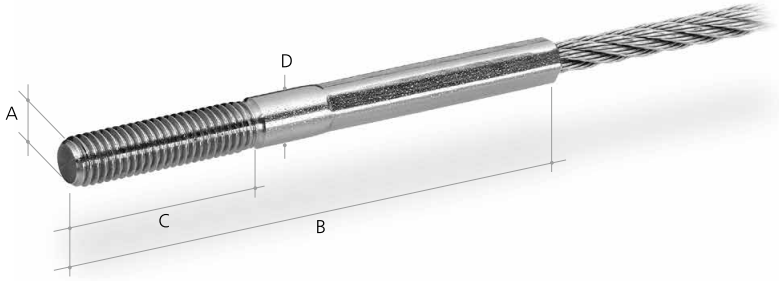

EXTERNAL THREAD FITTING hexagon swaged

item no. right-hand	item no. left-hand	rope ø (6 strands) in mm	rope ø (spiral) in mm	dimensions in mm A	B	C	D	drill hole in mm
49580	49581	1	1	M4	35	20	4	4,5
49582	49583	2	2	M5	75	45	5	5,5
49422	49423	3	3	M6	65	30	6	6,5
49584	49585	3	3	M6	85	50	6	6,5
29268	29269	4	4	M6	80	30	7	7,5
60231	60232	4	4	M6	100	60	7	7,5
49586	49587	4	4	M8	110	65	8	8,5
49424	49425	5	5	M8	85	30	8	8,5
49588	49589	5	5	M8	120	65	8	8,5
49426	49427	6	6	M10	100	30	11	11,5
49590	49591	6	6	M10	135	70	11	11,5
49428	49429	8	8	M12	120	30	13	13,5
49592	49593	8	8	M12	180	90	13	13,5
49660	49661	10		M16	220	110	18	18,5
61717	61718	12		M20	270	130	22	22,5
49430	49431	14		M22	290	140	25	25,5
49432	49433	16		M24	330	160	27	27,5

material: 1.4401

min. tensile strength is 90% of rope`s min. tensile strength
subject to changes of materials and dimensions

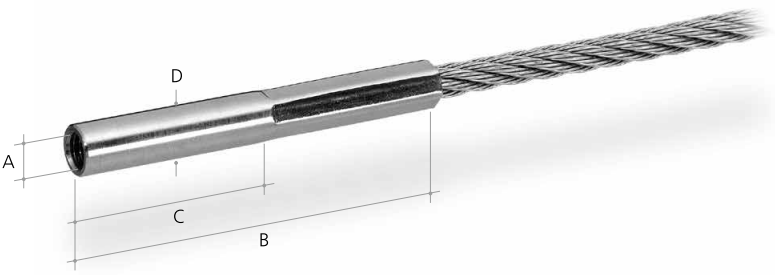

INTERNAL THREAD FITTING hexagon swaged

item no. right-hand	item no. left-hand	rope ø (6 strands) in mm	rope ø (spiral) in mm	dimensions in mm A	B	C	D	drill hole in mm
60900	60901	2	2	M4	40	15	6	6,5
60902	60903	3	3	M5	60	20	7	7,5
60904	60905	3	3	M5	100	35	7	7,5
60906	60907	4	4	M6	60	20	8	8,5
60908	60909	4	4	M6	100	35	8	8,5
60910	60911	5	5	M6	60	20	8	8,5
60912	60913	5	5	M6	100	35	8	8,5
60914	60915	6	6	M8	80	25	10	10,5
60916	60917	6	6	M8	130	50	10	10,5
60918	60919	8	8	M10	180	60	13	13,5
60920	60921	10		M12	210	80	18	18,5
60924	60925	12		M16	250	100	25	25,5
60928	60929	16		M20	290	120	32	32,5

material: 1.4401

min. tensile strength is 90% of rope`s min. tensile strength
subject to changes of materials and dimensions

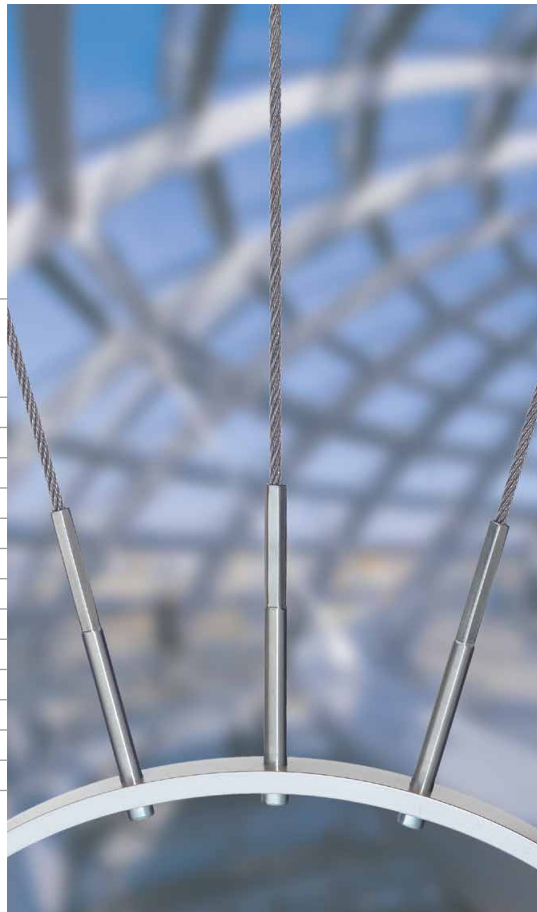

ROUNDED HEAD SLEEVE hexagon swaged

item no.	rope ø (6 strands) in mm	rope ø (spiral) in mm	dimensions in mm A	B	C	D	drill hole in mm
63538	3	3	8	12	36	4	8,5
63539	4	4	8	12	36	4	8,5
63540	5	5	10	16	43	6	10,5
63541	6	6	10	16	43	6	10,5

material: 1.4401 min. tensile strength is 90% of rope`s min. tensile strength

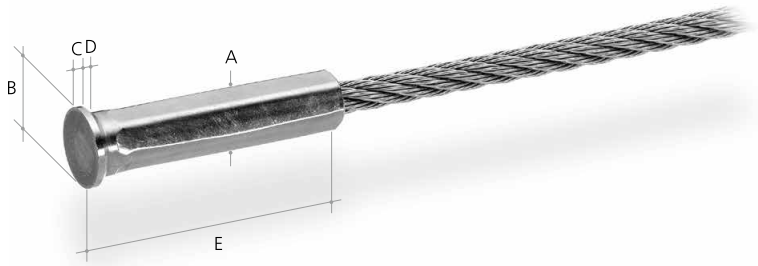

COUNTERSUNK HEAD SLEEVE 90° hexagon swaged

item no.	rope ø (6 strands) in mm	rope ø (spiral) in mm	dimensions in mm A	B	C	D	E	drill hole in mm
60983	3	3	8	10,4	1,2	2	35	8,5
60985	4	4	8	10,4	1,2	2	35	8,5
60987	5	5	10	12,4	1,2	2	40	10,5
60989	6	6	10	12,4	1,2	2	40	10,5

material: 1.4401 min. tensile strength is 90% of rope`s min. tensile strength

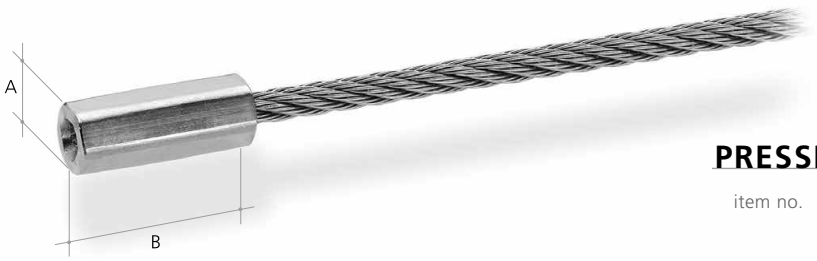

PRESSING-ON SLEEVE

item no.	rope ø (6 strands) in mm	for rope ø (spiral) in mm	dimensions in mm A	B	drill hole in mm
21513	2	2	6	12	2,5
44777	3	3	8	16	3,5
44778	5	5	12	26	5,5
44779	6	6	14	36	6,5

material: 1.4301 min. tensile strength is 90% of rope`s min. tensile strength

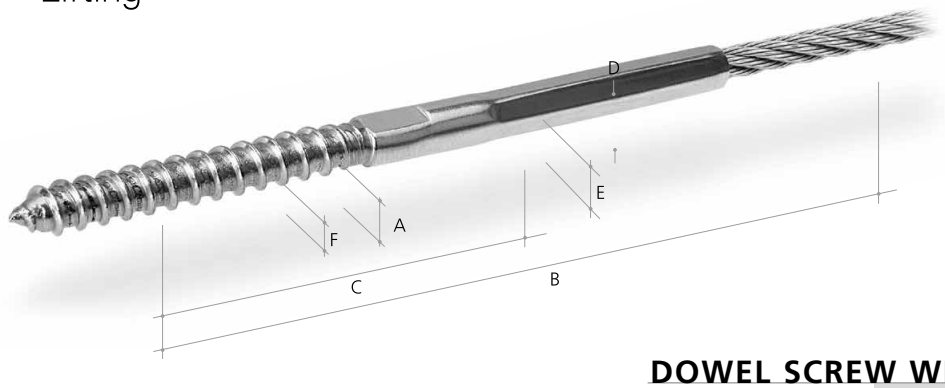

DOWEL SCREW WITH SWAGED HEAD

item no. right-hand	item no. left-hand	for rope ø in mm	dimensions in mm A	B	C	D	E	F	drill hole in mm
71000	71007	3	6	100	50	6,3	5	4,3	7,0
71001	71011	4	7,5	120	55	7,5	6	5,9	8,0

material: 1.4301 min. tensile strength is 90% of rope`s min. tensile strength

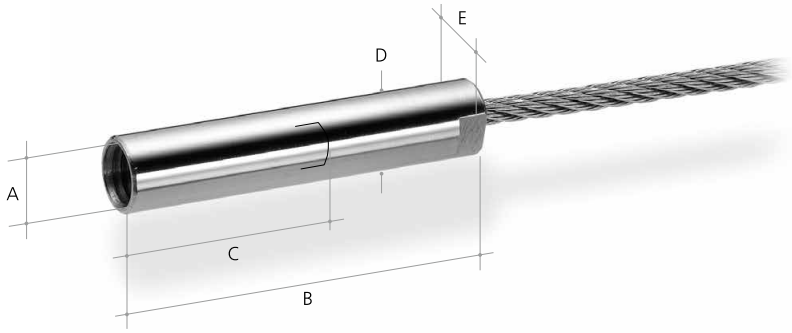

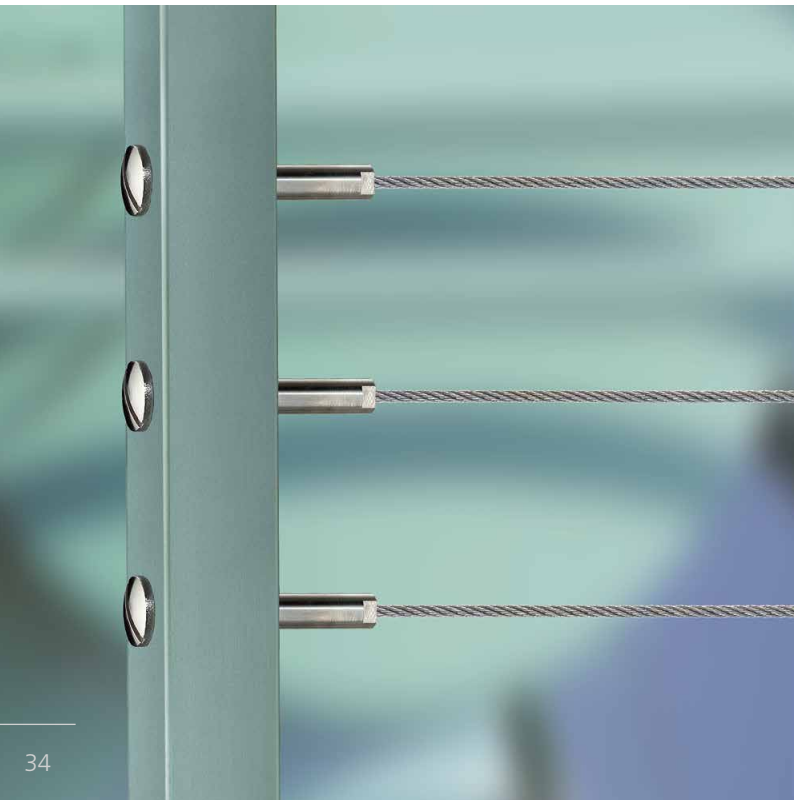

INTERNAL THREAD pivotable

item no. right-hand	for rope ø in mm	dimensions in mm A	B	C	D	E	drill hole in mm
71018	2	M6	32	15	8	6	8,5
71019	3	M8	50	25	10	8	10,5
71020	4	M10	60	30	12	10	12,5
71021	5	M12	65	30	15	12	15,5
71022	6	M16	95	50	18	15	18,5

material: 1.4301 min. tensile strength is 90% of rope`s min. tensile strength

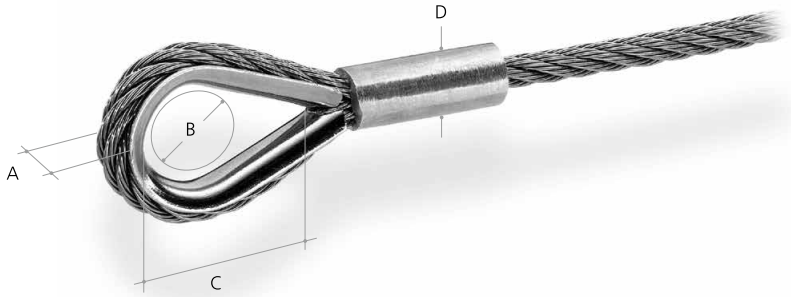

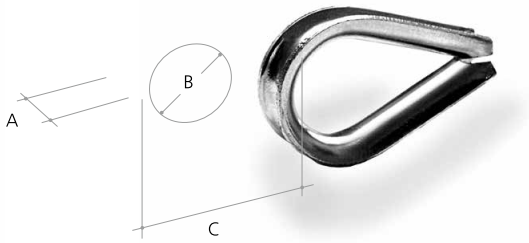

MECHANICAL THIMBLE SPLICE

item no. with alu-press sleeve	item no. with inox-press sleeve	solitary thimble	rope ø in mm	dimensions in mm A	B	C	D
61017	61018	02006	2	5,5	10	16	4
61019	61020	02007	3	6,5	11	17	6
61021	61022	02008	4	8,0	13	20	8
61023	61024	02009	5	9,0	16	25	10
61025	61026	02010	6	10,0	18	28	12
61027	61028	61037	8	12,0	20	32	16
61029	61030	61038	10	14,0	26	40	20
61031	61032	61039	12	15,0	28	45	24
61033	61034	61040	14	19,0	34	56	28
61035	61036	61041	16	22,0	37	62	32

material: 1.4301 (inox-press sleeve) min. tensile strength is 90% of rope`s min. tensile strength

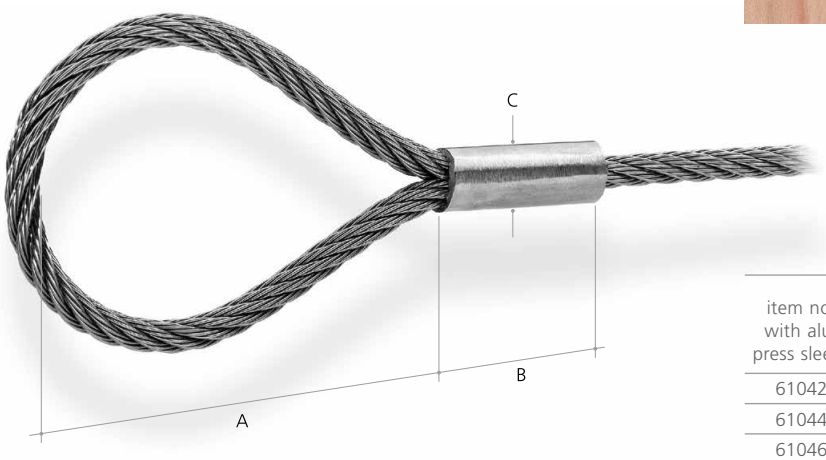

MECHANICAL LOOP SPLICE

item no. with alu-press sleeve	item no. with inox-press sleeve	for rope ø in mm	dimensions in mm A	B	C
61042	61043	2	30	10	4
61044	61045	3	45	15	6
61046	61047	4	60	20	8
61048	61049	5	75	25	10
61050	61051	6	90	30	12
61052	61053	8	120	40	16
61054	61055	10	150	50	20
61056	61057	12	180	60	24
61058	61059	14	210	70	28
61060	61061	16	240	80	32

material: 1.4301 (inox-press sleeve) min. tensile strength is 90% of rope`s min. tensile strength

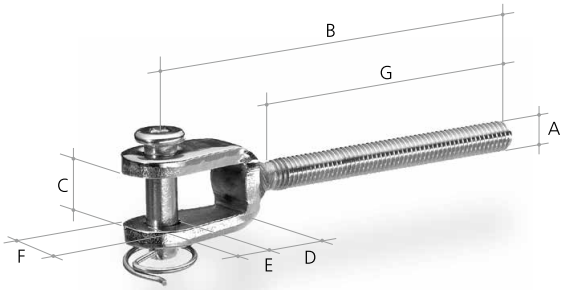

JAW with external thread

item no. right-hand	item no. left-hand	thread in mm A	dimensions in mm B	C	D	E	F	G	drill hole in mm
63621	63622	M4	38	7	9	5,0	13,0	20	5,5
61000	44920	M5	60	6	9	5,0	13,0	41	5,5
61001	44921	M6	67	8	9	6,0	13,0	47	6,5
61002	44922	M8	76	10	10	8,0	15,0	57	8,5
61003	44923	M10	90	12	11	10,0	18,0	63	10,5
61004	44924	M12	119	14	19	12,0	26,0	80	12,5
61006	44926	M16	151	16	26	16,0	31,0	100	16,5
61007	44927	M20	191	20	38	19,0	43,0	119	19,5
63532	63533	M24	258	30	50	25,4	51,0	170	26,0

material: 1.4401 **subject to changes of materials and dimensions**

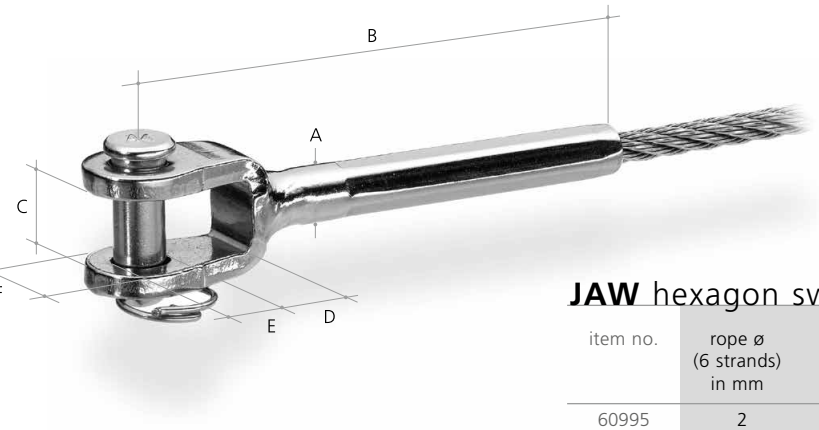

JAW hexagon swaged

item no.	rope ø (6 strands) in mm	rope ø (spiral) in mm	dimensions in mm A	B	C	D	E	F	drill hole in mm
60995	2	2	5,5	58	7,5	9	5,0	12,5	5,5
44783	3	3	6,3	64	8,0	9	5,0	12,5	5,5
44784	4	4	7,5	73	10,0	10	6,0	14,5	6,5
44785	5	5	9,0	84	12,0	11	8,0	18,0	8,5
44786	6	6	12,7	102	14,0	14	10,0	21,0	10,5
44788	8	8	16,0	130	16,0	19	12,0	26,0	15,5
60996	10		18,0	148	18,0	26	14,0	34,0	14,5
60997	12		20,0	205	24,0	38	19,0	43,0	19,5
60998	14		24,8	214	20,0	28	21,0	51,0	21,5
60999	16		28,2	238	20,0	30	21,5	51,0	22,0

material: 1.4401 min. tensile strength is 90% of rope`s min. tensile strength
subject to changes of materials and dimensions

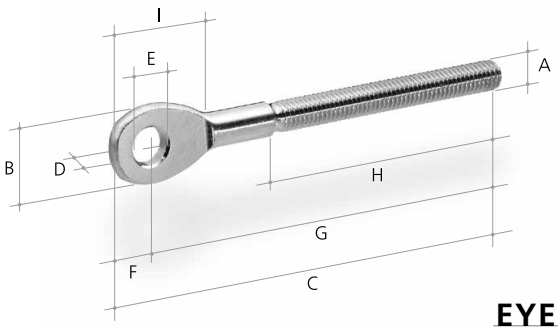

EYE TERMINAL with external thread

item no. right-hand	item no. left-hand	thread in mm	dimensions in mm B	C	D	E	F	G	H	I	drill hole in mm
60966	60967	M5	12	61	3	5,5	7,0	54	36	18	5,5
60968	60969	M6	14	69	4	6,5	7,5	62	38	16	6,5
60970	60971	M8	17	84	6	8,5	8,0	76	50	24	8,5
60972	60973	M10	22	100	7	10,0	10,0	88	63	27	10,0
60974	60975	M12	25	118	8	12,0	13,0	105	75	30	12,0
60978	60979	M16	31	150	10	14,0	16,0	134	100	40	14,0
60980	60981	M20	37	188	15	19,0	20,0	168	120	50	19,0

material: 1.4401 **size alteration possible**

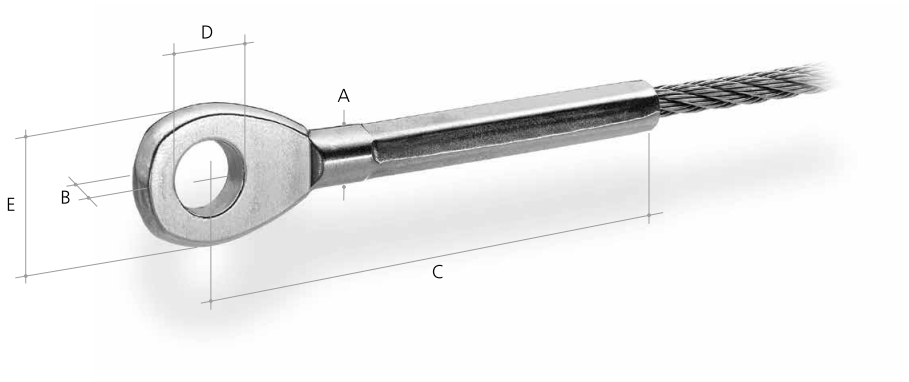

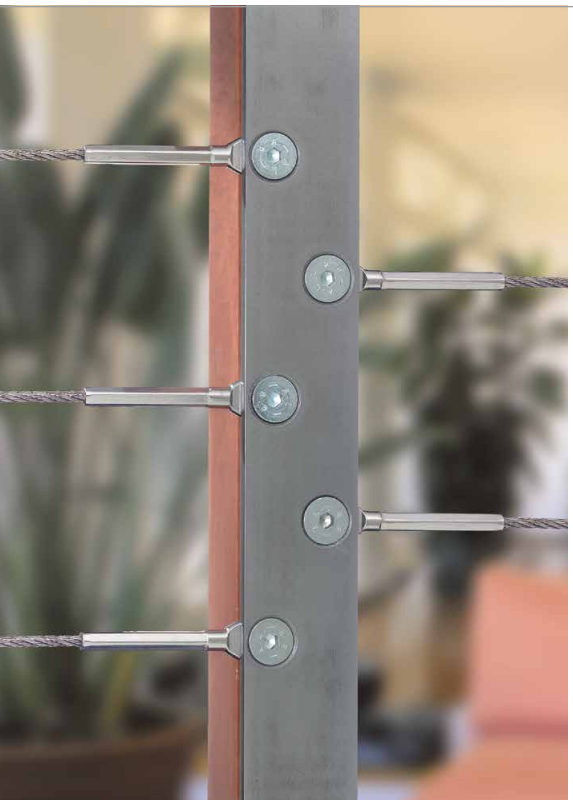

EYE TERMINAL hexagon swaged

item no.	rope ø (6 strands) in mm	rope ø (spiral) in mm	dimensions in mm A	B	C	D	E	drill hole in mm
60990	2	2	5,5	3	45	5,5	12	5,5
44789	3	3	6,3	4	53	6,5	13	6,5
44790	4	4	7,5	6	63	8,0	17	8,0
44791	5	5	9,0	7	76	10,0	20	10,0
44792	6	6	12,7	8	94	12,5	24	12,5
44794	8	8	16,0	10	112	14,5	30	14,5
60992	12		20,0	16	190	19,0	38	19,0
60993	14		24,8	20	200	22,5	41	22,5
60994	16		28,2	20	211	22,5	44	22,5

material: 1.4401 min. tensile strength is 90% of rope`s min. tensile strength
size alteration possible

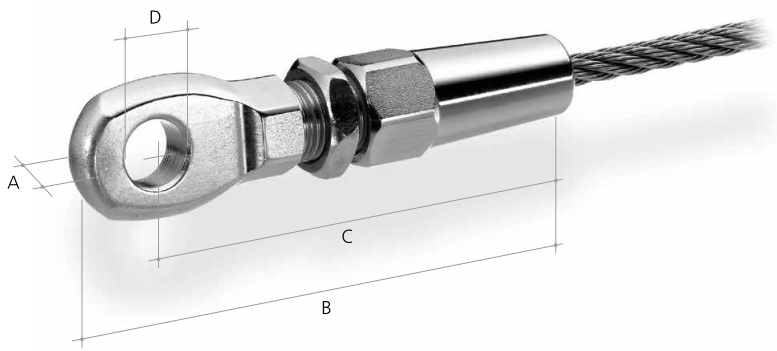

EYE TERMINAL for self-assembly

item no.	for rope ø	dimensions in mm				drill hole
	in mm	A	B	C	D	in mm
64236	4	7,0	68	58	8,3	8,3
64237	5	8,0	78	67	10,3	10,3
64238	6	9,0	94	80	12,3	12,3
64239	8	10,5	116	98	14,3	14,3

material: 1.4401 min. tensile strength is 90% of rope`s min. tensile strength

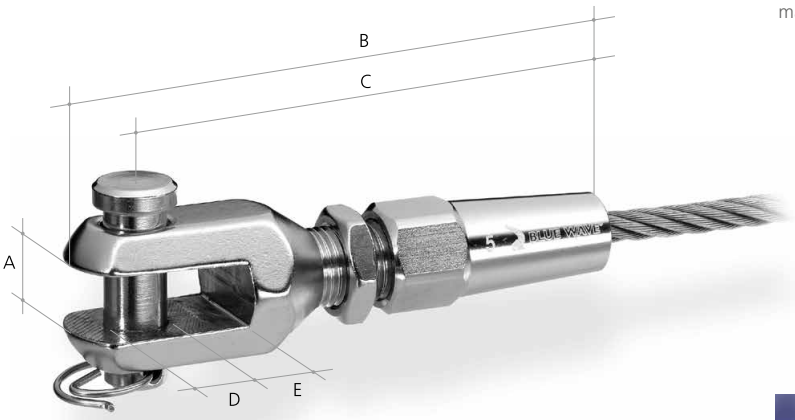

JAW for self-assembly

item no.	for rope ø	dimensions in mm					drill hole
	in mm	A	B	C	D	E	in mm
64240	4	8	73	62	8	8	8,5
64241	5	10	80	69	10	10	10,5
64242	6	12	92	79	12	12	12,5
64243	8	14	113	98	14	14	14,5

material: 1.4401 min. tensile strength is 90% of rope`s min. tensile strength

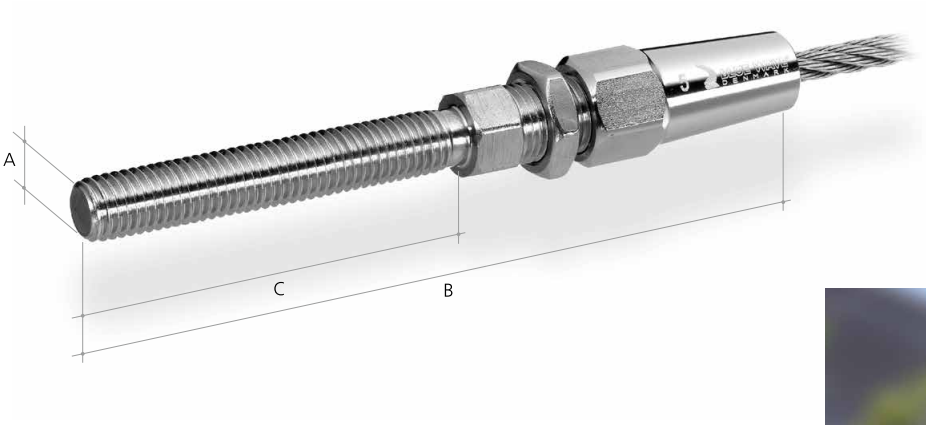

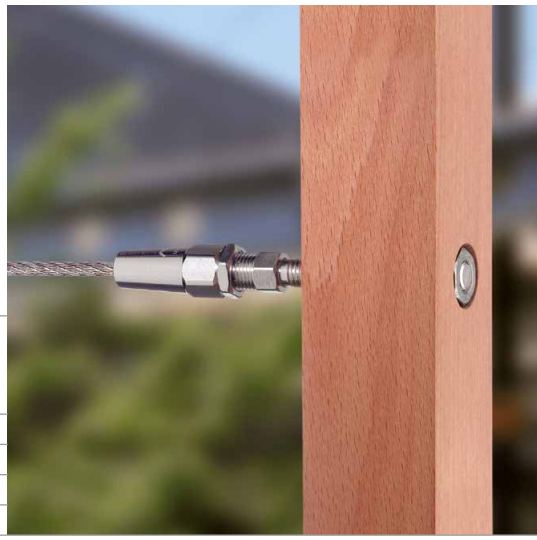

THREAD TERMINAL for self-assembly

item no. right-hand	for rope ø in mm	dimensions in mm A	B	C	drill hole in mm
64244	4	M8	102	57	4,5
64245	5	M10	114	63	5,5
64246	6	M12	142	80	6,5
64247	8	M14	168	89	8,5

material: 1.4401 min. tensile strength is 90% of rope`s min. tensile strength

1.

2.

3.

SCREW TERMINALS for self-assembly

Easy to assemble within seconds:

1. Dismantle the terminal prior to assembly.
2. Slide jaw receiver, jaws and thrust ring onto the wire rope.
   Make sure that the end of the rope protrudes by 5 mm (see pict.).
3. Push terminal together, pull connection tight and secure with counternut.
   The terminals are suited for any type of wire rope.

DO IT LINE

For everybody who likes to take matters into their own hands, we have developed **DO IT LINE** – a program allowing you to assemble ropes and end connections individually.
Thus, **DO IT LINE** offers you a maximum freedom of decision from the first planning idea until the last step on site.
The flexible system is suitable both for temporary and permanent installation.

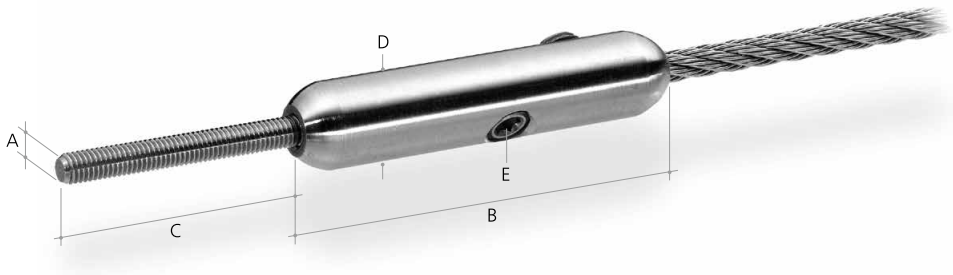

EXTERNAL THREAD DO IT LINE for self assembly

item no. right-hand	for rope ø (6 strands) in mm	dimensions in mm A	B	C	D	E	min. tensile strength in kN	drill hole in mm
78223	3	M3	45	40	12	M6	2,5	3,5
78224	4	M4	45	40	13	M6	3,0	4,5
78225	5	M5	65	40	14	M8	7,0	5,5
78226	6	M6	65	40	14	M8	7,0	6,5

material: 1.4301

Only in connection with stranded rope 6x7 and 6x19
left-hand on request

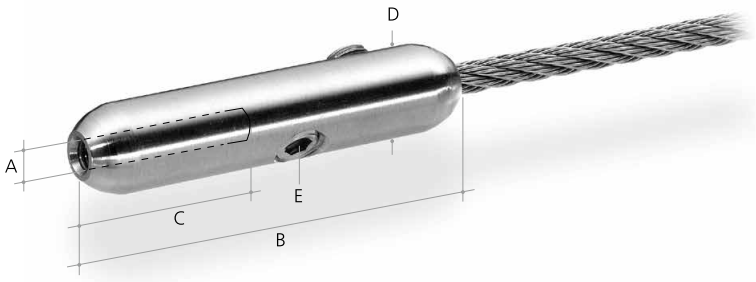

INTERNAL THREAD DO IT LINE for self assembly

item no. right-hand	item no. left-hand	for rope ø in mm	dimensions in mm A	B	C	D	E	min. tensile strength in kN	drill hole in mm
78273	78227	3	M3	45	15	12	M6	2,5	3,5
78274	78228	4	M4	45	15	13	M6	3,0	4,5
78275	78229	5	M5	65	15	14	M8	7,0	5,5
78276	78230	6	M6	65	15	14	M8	7,0	6,5

material: 1.4301

Only in connection with stranded rope 6x7 and 6x19

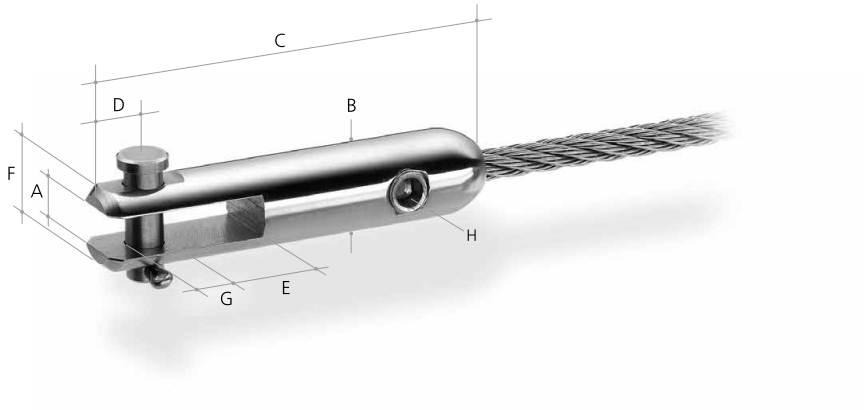

JAW DO IT LINE for self assembly

item no.	for rope ø in mm	dimensions in mm A	B	C	D	E	F	G	H	min. tensile strength in kN	drill hole to G in mm
10636	3	5,5	12	49	6,5	10,15	10,0	4,7	M6	2,5	5,5
10637	4	5,5	13	49	6,5	10,15	10,0	4,7	M6	3,0	5,5
10638	5	6,5	14	65	8,0	13,90	12,6	6,2	M8	7,0	6,5
10639	6	6,5	14	65	8,0	13,90	12,6	6,2	M8	7,0	6,5

material: 1.4301 Only in connection with stranded rope 6x7 and 6x19

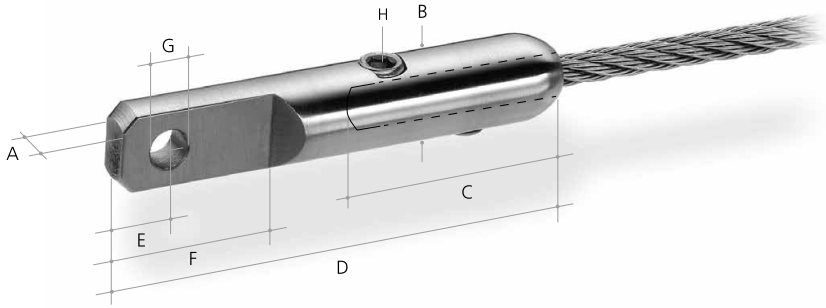

EYE TERMINAL DO IT LINE for self assembly

item no.	for rope ø in mm	dimensions in mm A	B	C	D	E	F	G	H	min. tensile strength in kN	drill hole to A in mm
10632	3	4,5	12	27	59	6,5	19	4,7	M6	2,5	4,7
10633	4	4,5	13	27	59	6,5	19	4,7	M6	3,0	4,7
10634	5	6,0	14	37	75	8,0	25	6,2	M8	7,0	6,2
10635	6	6,0	14	37	75	8,0	25	6,2	M8	7,0	6,2

material: 1.4301 Only in connection with stranded rope 6x7 and 6x19

DECO LINE

The design of wall areas and interior furnishings requires shapely and multi-functional parts. Fulfil your very personal requirements by combining different elements from **DECO LINE** with parts from **FINE LINE, DO IT LINE** or **STANDARD LINE.**

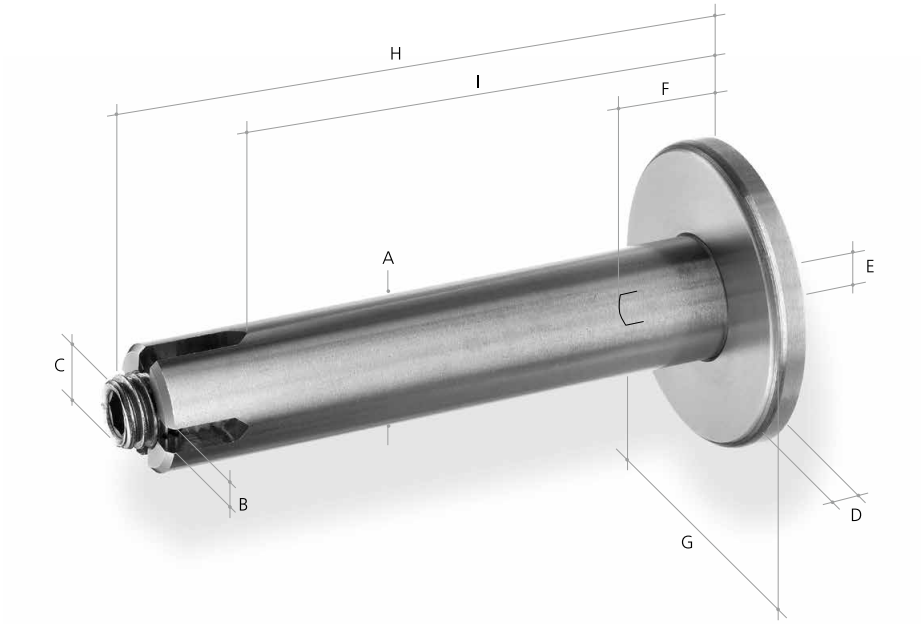

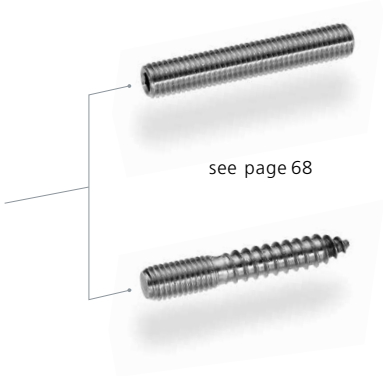

WALL MOUNT HOLDER with supporting disc

item no.	for rope ø	dimensions in mm								
	in mm	A	B	C	D	E	F	G	H	I
61875	2 - 6	20	6,2	M12	5	M10	20	50	102	86

material: 1.4305 other lengths available on request

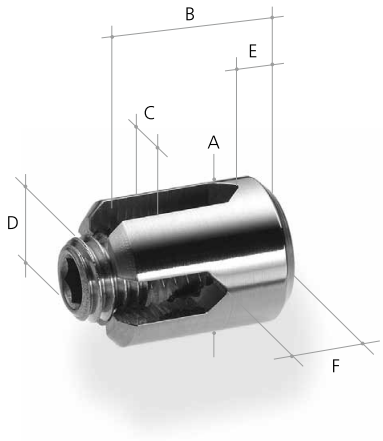

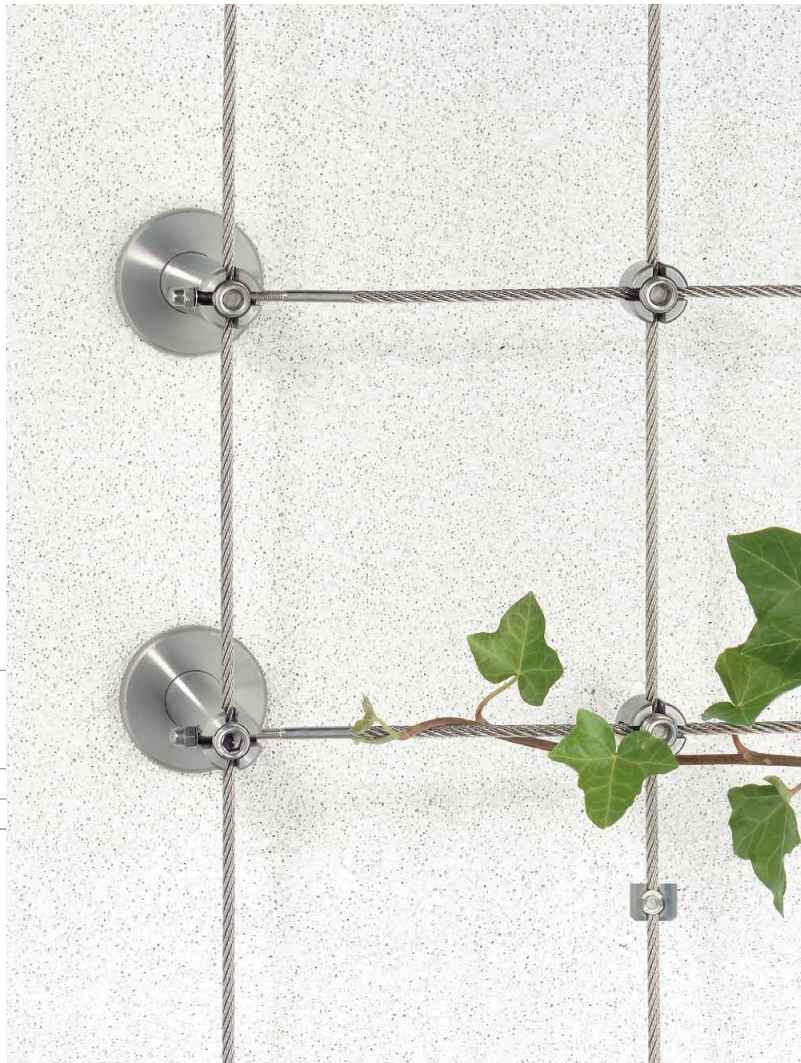

CROSS CLAMP 90°

item no.	for rope ø	dimensions in mm					
	in mm	A	B	C	D	E	F
61064	2 - 4	20	21	4,2	M12	5	7
61066	5 - 6	20	25	6,2	M12	5	10

material: 1.4305

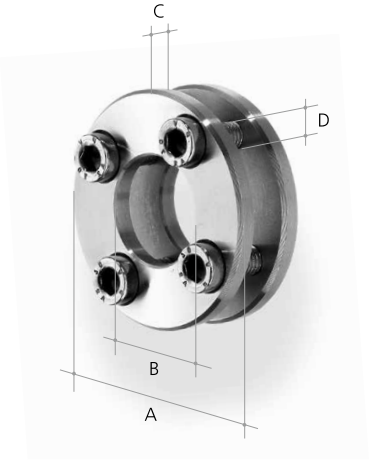

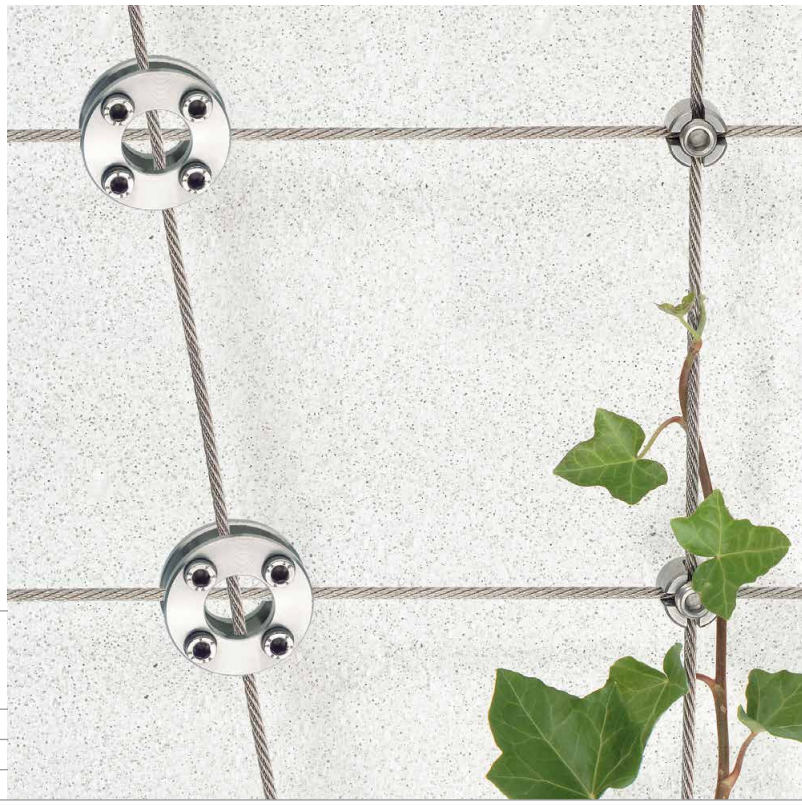

CROSS CLAMP 0-180°

item no.	for rope ø in mm	dimensions in mm A	B	C	D
63568	3 - 4	32	14,7	2,7	M4
63570	5 - 6	48	22,0	4,2	M6
63572	8	64	29,3	5,0	M8

material: 1.4305

CLIMBING RUNG plastic

item no.	for rope ø in mm	l x w x h in mm
77935	4	20 x 15 x 10

material: plastic; uv-resistant

FACADE PLANTING OFFERS MANY ADVANTAGES

Good indoor climate
Facade plantings have an insulating effect which helps to avoid extreme variations in temperature inside the building. Thus a pleasant room climate can be achieved in quite a natural way.

Facade protection
Planting the facade protects it from sun and rain, thus increasing its lifetime.

Attractive appearance
Green facades are simply beautiful! The combination of living green and architecture offers a wealth of charming design options. Together with architects and garden designers, the specialists from Brugg have already realised numerous attractive solutions.

Creating green spaces
In many places ground is scarce and expensive. A green dress for houses opens up the possibility to create additional green space at a favourable price. These micro gardens raise the quality of our lives.

PLANTS AND CLIMBING VARIETIES

Twiners, such as glycinia, honeysuckles, celastrus, pharbitis and hop wrap themselves around their climbing aids. In the first place, they need vertical climbing aids. With stainless steel ropes, nice and inexpensive solutions may be realized.

Ranunculaceae such as nasturtium and clematis clasp their climbing aids and therefore need trellis or weblike constructions. For this purpose, stainless steel ropes are well suited in combination with spacing pieces and rope cross clamps.

Among others, the family of the **vitaceae** comprises creepers like genuine vines, ampelopsis, cucumbers and passifloraceae. Similar to the ranunculaceae, they thrive best on web or trellislike creeping aids, which can be designed as long-lasting, attractive objects using stainless steel ropes, rope cross clamps and spacing pieces.

Rambling roses, jasminum nudiflorum and other **spreading climbers** grow and cling with their bristles, spines and lateral offshoots. They find a perfect climbing aid in horizontal rope constructions made of stainless steel.

Parthenocissus (wild wine) is the most widespread **adhesive climber** in our latitudes. It actually does not need any climbing aid, since it can cling even to very smooth surfaces thanks to its anchoring feet. Thereby, however, adhesive climbers can cause facade damages.

Root climbers such as ivy, euonymus, hydrangea and campsis hold themselves with their air roots and need no climbing aid. Just like adhesive climbers, these plants can easily cause facade damages.

PLANNING AND DESIGN

When planning a construction for climbers, you need to consider the following weights and forces:

Plant weight
Depending on species, growth and care, the plant's weight can range from between 1 and 50 kg/m^2.

Wind
Furthermore, wind pressure, cross-wind and wind suction must be heeded. For this reason, expect an estimated impact pressure of 0.5 kN/m^2 for a climber construction of up to 8 metres. For a height between 8 and 20 metres, the pressure would be approx. 0.8 kN/m^2 and approx. 1.1 kN/m^2 beyond 20 metres. In addition, the fixing devices must take up cross-wind forces and tensile loads caused by wind pull.

Dead weight of the climbing scaffold
The Brugg product range of architectural ropes offers simple, lightweight and yet sturdy fixtures for your climber plants.

Weather conditions
It should be noted that snow, rain and dew will put a considerable extra load on a planted scaffold. When planning a scaffold structure as a climbing aid, you should therefore calculate with the double or even triple value of the plant's weight.

Load distribution
Another important factor are the tension forces of the ropes which must never be neglected. If, for instance, the entire vertical load is taken up at the top and the bottom, then the upper fixture must take up the entire vertical load plus half of the wind load, whereas its lower counterpart only has to deal with half of the wind load. So always be sure to include a sufficient load reserve in your plans!

M8

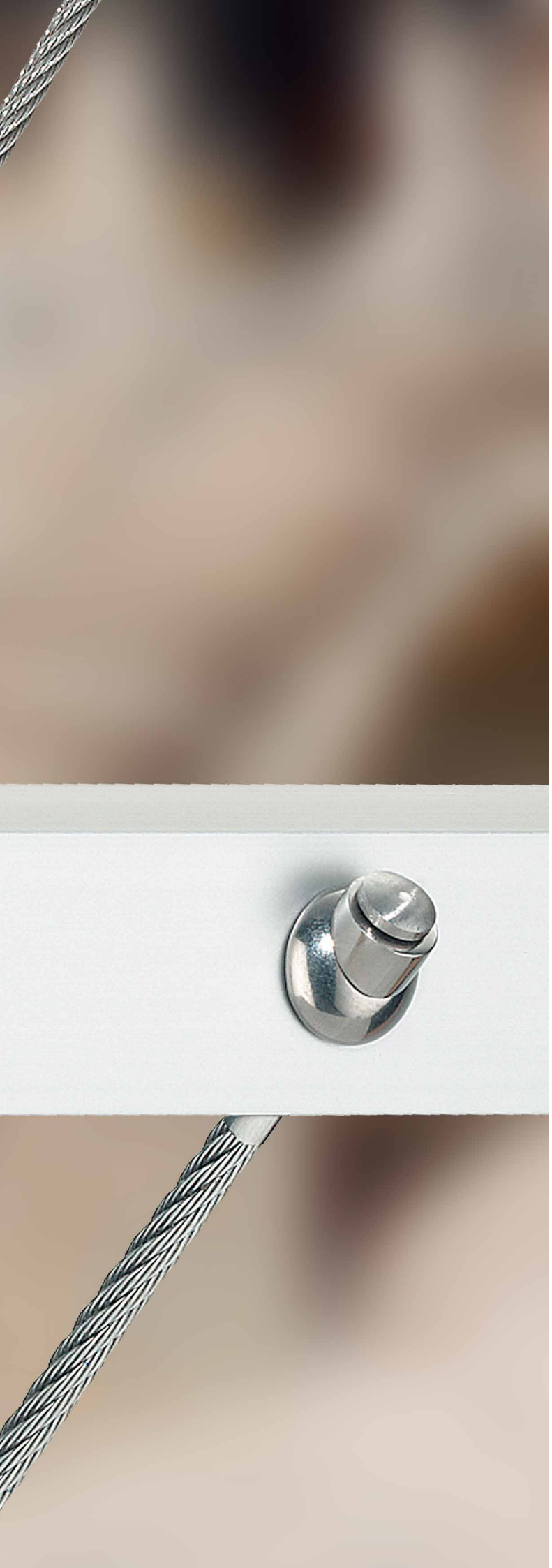

ACCESSORIES

Within our range of accessories you will find items to help create perfectly detailed solutions. They can be used for various purposes and are compatible with all parts of our different product lines. We are happy to procure and deliver dimensions and types not listed within this catalogue.

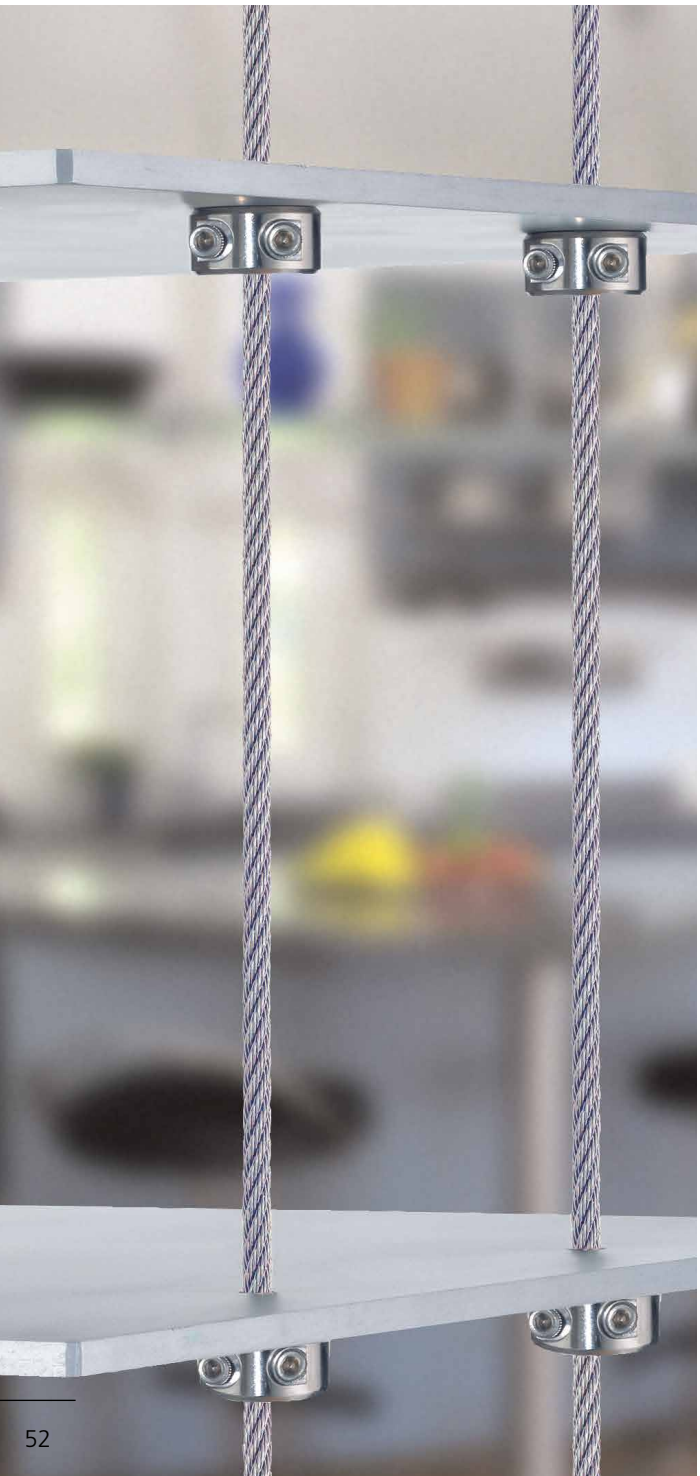

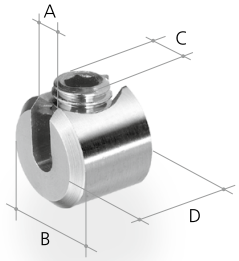

SLOTTED CLAMPING BUTTON

item no.	for rope ø	dimensions in mm			
	in mm	A	B	C	D
63526	3 - 4	4,2	15	M8	12
63528	5 - 6	6,2	20	M10	15

material: 1.4305

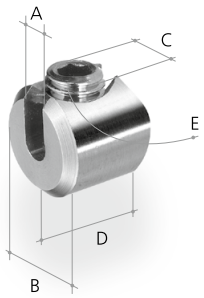

SLOTTED CLAMPING BUTTON for round profiles

item no.	for rope ø	dimensions in mm				
	in mm	A	B	C	D	E
63529	3 - 4	4,2	15	M8	12	ø42,4
63530	5 - 6	6,2	20	M10	15	ø42,4

material: 1.4305

CLAMPING BUTTON heavy duty

item no.	for rope ø in mm	dimensions in mm A	B
63521	3	22	27
63522	4	22	27
63523	5	28	42
63524	6	28	42
63525	8	28	42

material: 1.4305

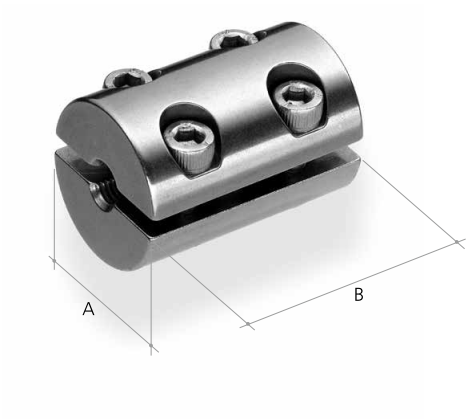

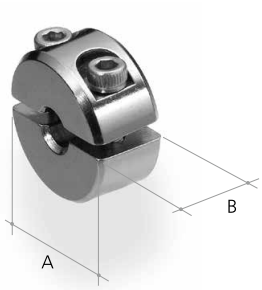

CLAMPING BUTTON standard duty

item no.	for rope ø in mm	dimensions in mm A	B
61350	3	15	10
61351	4	15	10
61352	5	20	10
61353	6	20	10
63520	8	20	10

material: 1.4305

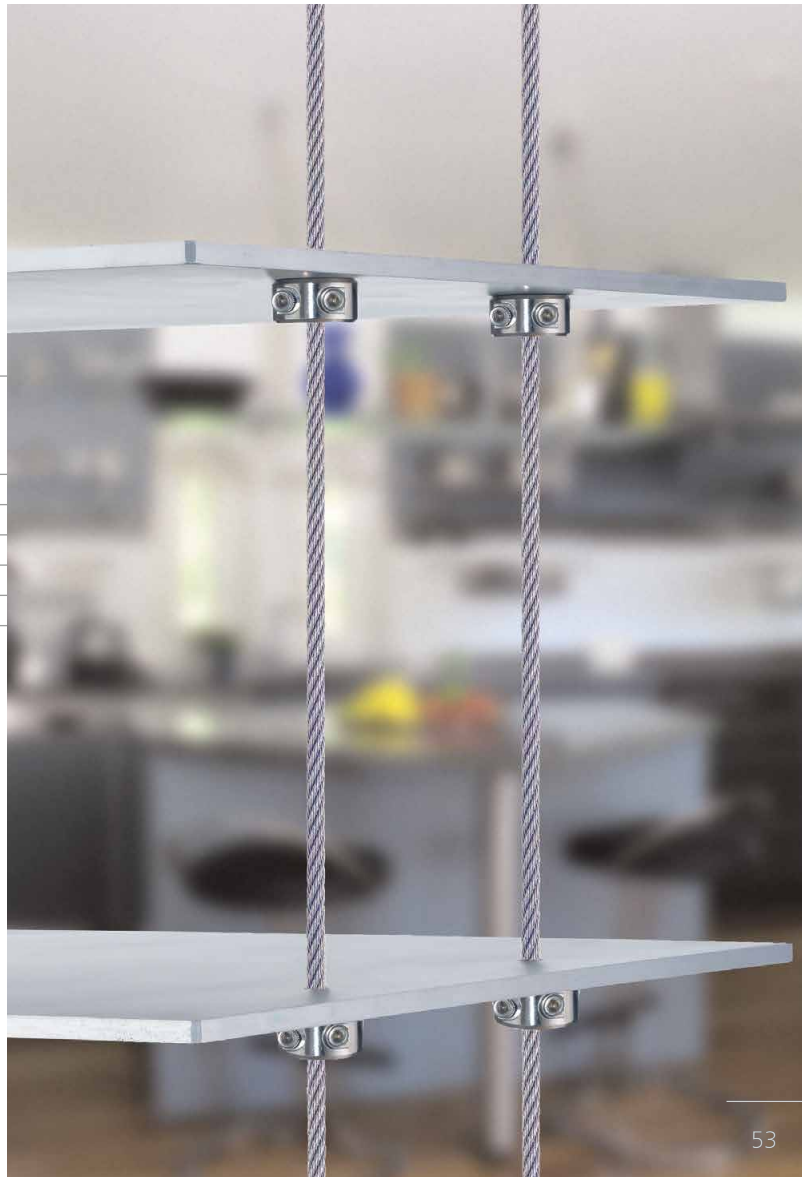

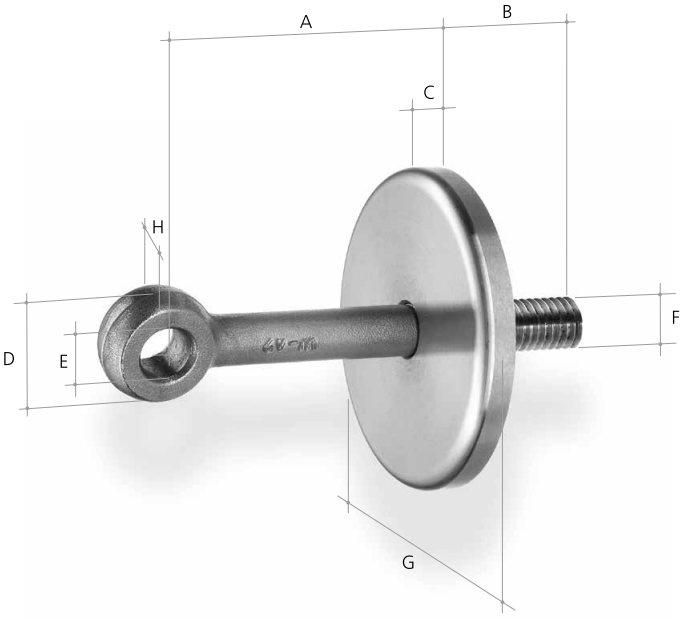

RING BOLT with supporting disc

item no. dimensions in mm

	A	B	C	D	E	F	G	H
61392	28	21	6	18	8	M8	50	9
61069	60	21	6	18	8	M8	50	9

material: 1.4305

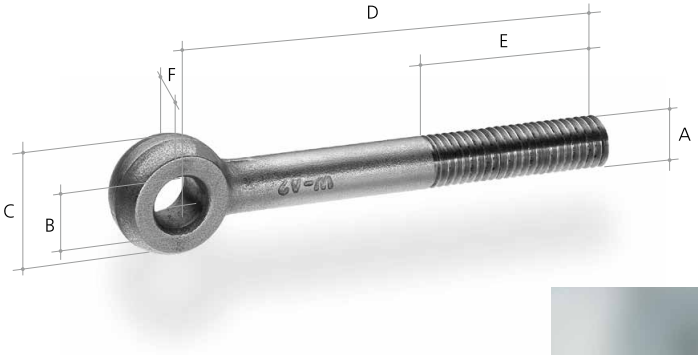

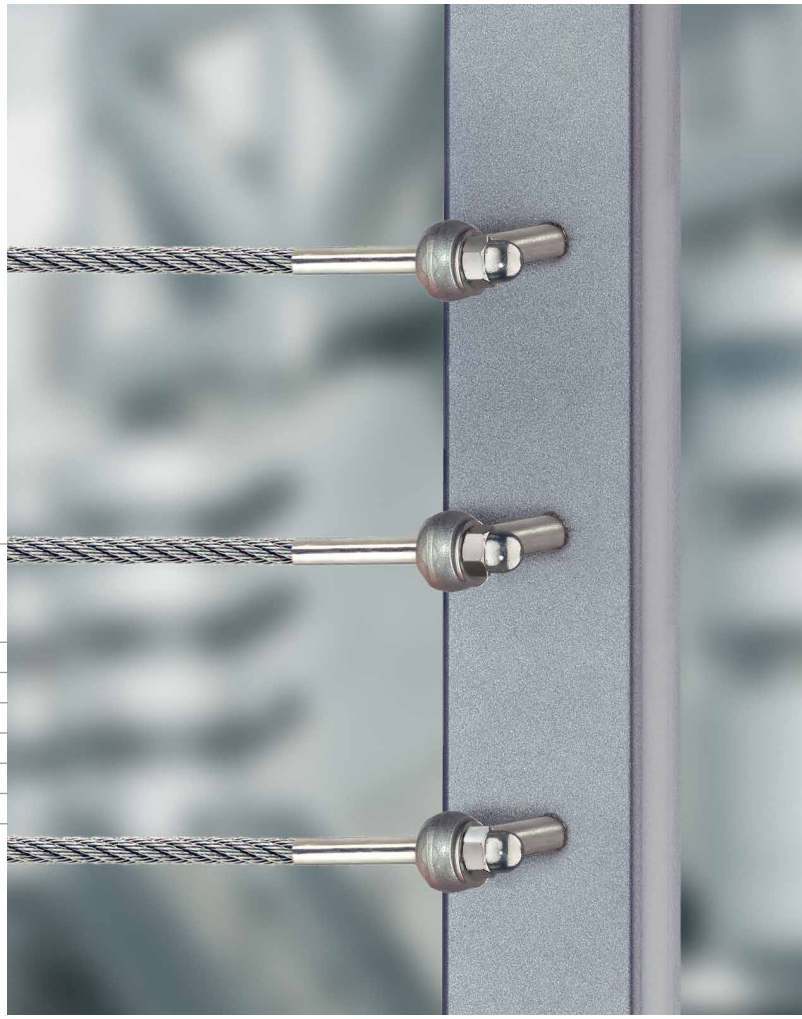

RING BOLT

item no. right-hand	thread in mm A	dimensions in mm B	C	D	E	F
61072	M6	6	14	40	18	7
61076	M8	8	18	40	22	9
61080	M10	10	20	50	26	12
61084	M12	12	25	50	30	14
61088	M16	16	32	60	38	17
61092	M20	18	40	80	46	22

material: 1.4301

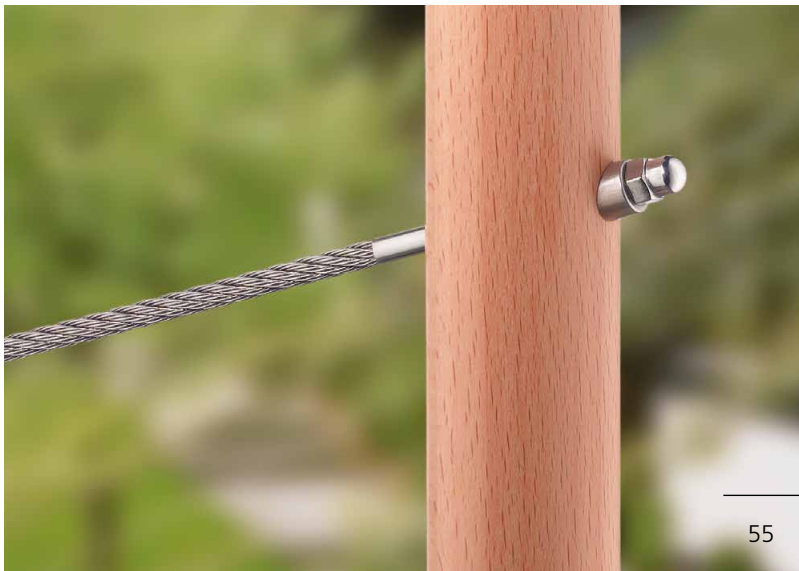

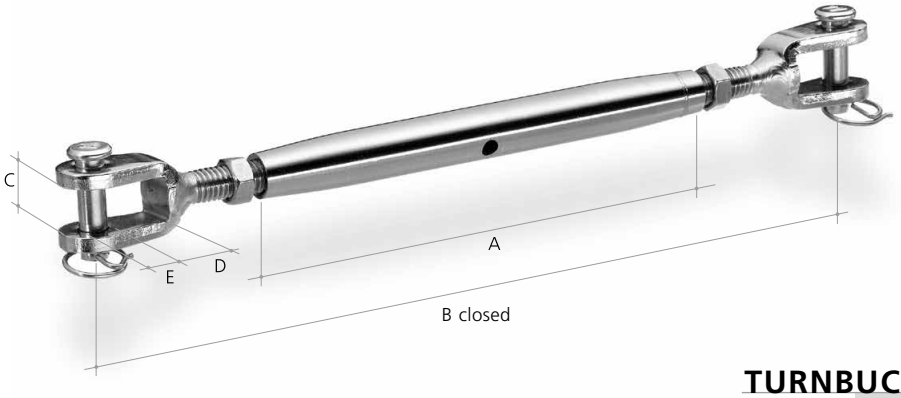

TURNBUCKLE with jaw ends

item no.	thread in mm	dimensions in mm A	B	C	D	E	WLL with 5-fold safty in kN
63623	M4	80	125	7	9	5	1,05
49650	M5	80	130	6	9	5	1,77
49651	M6	90	140	8	9	6	2,45
49652	M8	110	170	10	10	8	4,32
49653	M10	120	190	12	11	10	6,87
49654	M12	150	250	14	19	12	10,00
49656	M16	190	310	16	26	16	15,70
49657	M20	220	400	20	38	19	20,60

material: 1.4401 WLL: Working Load Limit

TURNBUCKLE

item no.	thread in mm	dimensions in mm A	B	max. length to clamp in mm
10520	M4	80	7	80
10521	M5	80	8	80
10522	M6	90	10	90
10523	M8	110	14	110
10524	M10	120	18	120
10525	M12	150	21	150
10527	M16	190	27	190
10528	M20	220	33	220
10518	M22	270	45	270
10519	M24	325	50	325

material: 1.4401

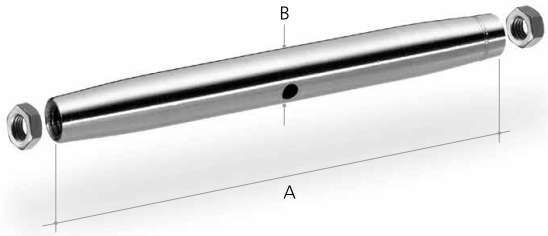

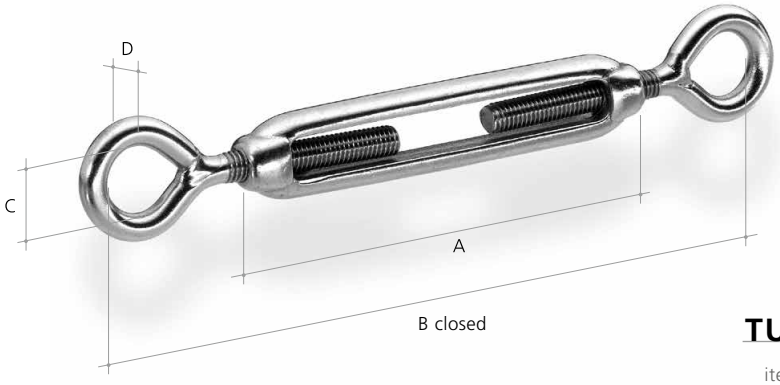

TURNBUCKLE open with eye ends

item no.	thread in inch	dimensions in mm A	B	C	D	WLL with 5-fold safty in kN
49640	M5	70	110	7	4,0	0,78
49641	M6	90	140	10	5,5	1,57
49642	M10	150	220	15	8,5	3,70
49643	M12	200	280	19	11,0	6,60
49644	M16	250	350	20	14,0	9,80
49645	M20	305	450	28	17,0	15,70

material: 1.4301 WLL: Working Load Limit

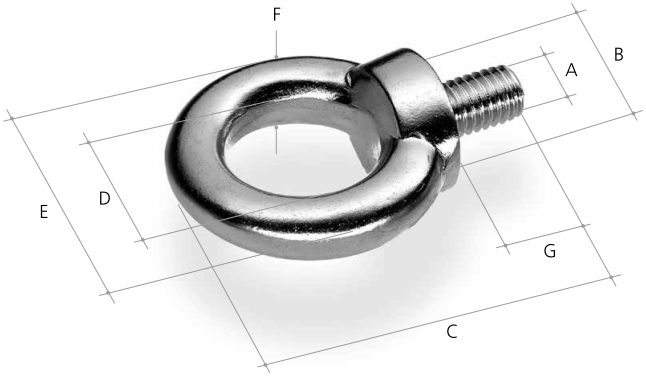

EYE BOLT

item no.	thread in mm	dimensions in mm						WLL with 6-fold safty in kN angle of traction	
	A	B	C	D	E	F	G	90°	45°
63591	M8	20	49	20	36	8	13,0	1,4	1,0
63592	M10	25	62	25	45	10	17,0	2,3	1,7
63593	M12	30	73	30	54	12	20,5	3,4	2,4
63594	M16	35	90	35	63	14	26,0	7,0	5,0
63595	M20	40	101	40	72	16	30,0	12,0	8,6
63597	M30	60	132	60	108	24	45,0	32,0	23,0

material: 1.4301 WLL: Working Load Limit

EYE NUT

item no.	thread in mm	dimensions in mm					WLL with 6-fold safty in kN angle of traction	
	A	B	C	D	E	F	90°	45°
63598	M8	20	36	20	36	8	1,4	1,0
63599	M10	25	45	25	45	10	2,3	1,7
63600	M12	30	53	30	54	12	3,4	2,4
63601	M16	35	62	35	63	14	7,0	5,0
63602	M20	40	71	40	72	16	12,0	8,6
63603	M24	50	90	50	90	20	18,0	12,9

material: 1.4301 WLL: Working Load Limit

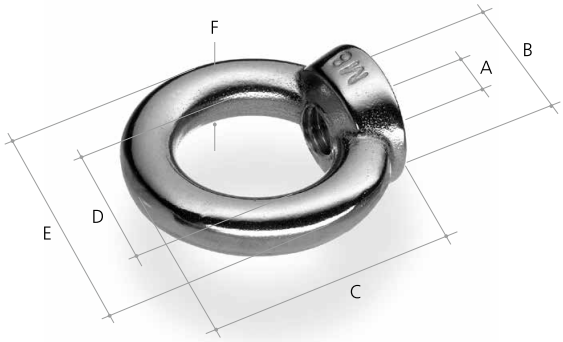

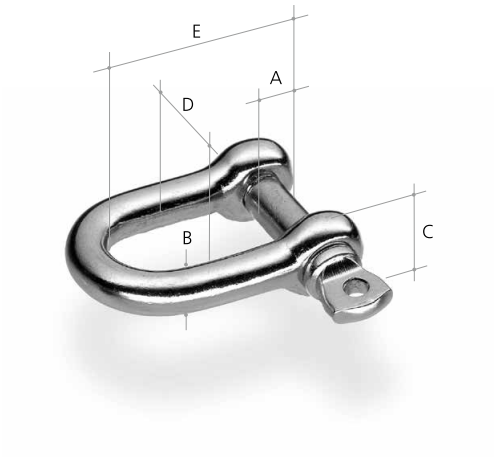

„D"-SHACKLE

item no.	dimensions in mm					WLL with 5-fold safty in kN
	ø A	B	C	D	E	
61008	5	5	10	10	17	3,14
44938	6	6	12	12	21	3,82
44939	8	8	16	16	28	4,90
44940	10	10	19	19	35	8,83
61009	11	12	24	23	41	11,77
44941	13	13	26	26	45	13,73
44942	15	16	32	31	55	23,54
44943	18	19	38	38	66	33,35
44944	21	22	44	45	76	39,24

material: 1.4401 WLL: Working Load Limit

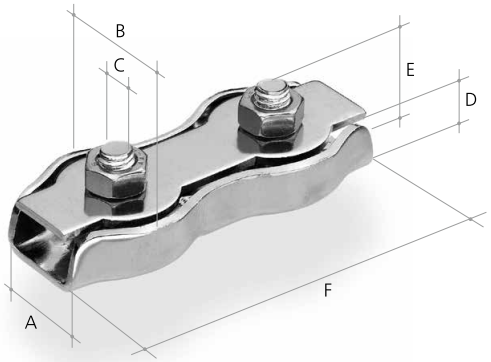

DUPLEX-CLAMP

item no.	for rope ø (6 strands) in mm	dimensions in mm					
		A	B	C	D	E	F
49325	2	4	12	M4	5	14	30
49326	3	6	14	M4	7	14	35
49327	4	8	18	M5	7	18	40
49328	5	10	20	M5	8	18	50
49329	6	12	24	M6	9	23	60
49330	8	17	30	M8	13	25	75
49331	10	21	35	M10	16	32	95

material: 1.4301

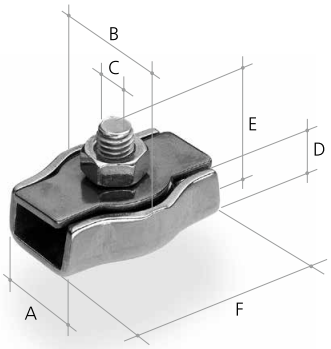

SIMPLEX-CLAMP

item no.	for rope ø (6 strands) in mm	dimensions in mm					
		A	B	C	D	E	F
49315	2	4	12	M4	5	14	15
49316	3	6	14	M4	7	14	17
49317	4	8	18	M5	7	18	20
49318	5	10	20	M5	8	18	25
49319	6	12	24	M6	9	23	30
49320	8	17	30	M8	13	25	37

material: 1.4301

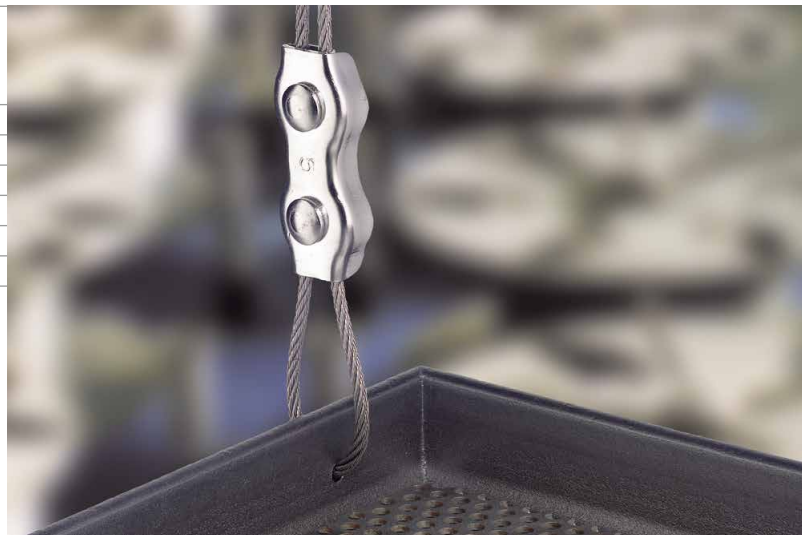

WIRE ROPE CLAMP light*

item no.	for rope ø in mm	number of clips per splice
72880	2	3
72881	3	3
72882	4	4
72883	5	4
72884	6	4
72885	8	4
72886	10	4

material: 1.4401 * for secondary applications

WIRE ROPE CLAMP heavy

item no.	for rope ø in mm	number of clips per splice
29142	2	3
29143	3 - 4	3
29144	5 - 6	4
29145	8	4
29146	10	4
29147	12	4
61011	16	4

material: 1.4401 min. tensile strength is 80% of rope's min. tensile strength

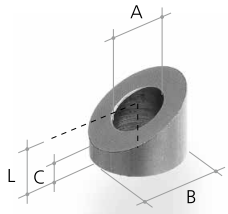

PROFILE CONNECTION for flat profiles

item no.	for thread in mm	lead angle α	dimensions in mm A	B	C	L
77759	M3-M5	0°	5,5	10	10	10,0
62820	M3-M5	20°	5,5	10	3	4,8
62822	M3-M5	30°	5,5	10	3	5,9
62823	M3-M5	35°	5,5	10	3	6,5
62824	M3-M5	40°	5,5	10	3	7,2
62825	M3-M5	45°	5,5	10	3	8,0
62826	M3-M5	50°	5,5	10	3	9,0
62827	M3-M5	55°	5,5	10	3	10,1
77760	M 6	0°	6,5	13	10	10,0
62832	M 6	30°	6,5	13	3	6,8
62833	M 6	35°	6,5	13	3	7,8
62834	M 6	40°	6,5	13	3	8,5
62835	M 6	45°	6,5	13	3	9,5
62836	M 6	50°	6,5	13	3	10,7
62837	M 6	55°	6,5	13	3	12,3
77761	M 8	0°	8,5	18	10	10,0
62840	M 8	20°	8,5	18	3	6,3
62842	M 8	30°	8,5	18	3	8,2
62843	M 8	35°	8,5	18	3	9,3
62844	M 8	40°	8,5	18	3	10,6
62845	M 8	45°	8,5	18	3	12,0
62846	M 8	50°	8,5	18	3	13,7
62847	M 8	55°	8,5	18	3	15,9
62850	M10	20°	10,5	22	3	7,0
62851	M10	25°	10,5	22	3	8,0
62852	M10	30°	10,5	22	3	9,4
62854	M10	40°	10,5	22	3	12,2

material: 1.4305 NOTE: Please state angle α with your order!

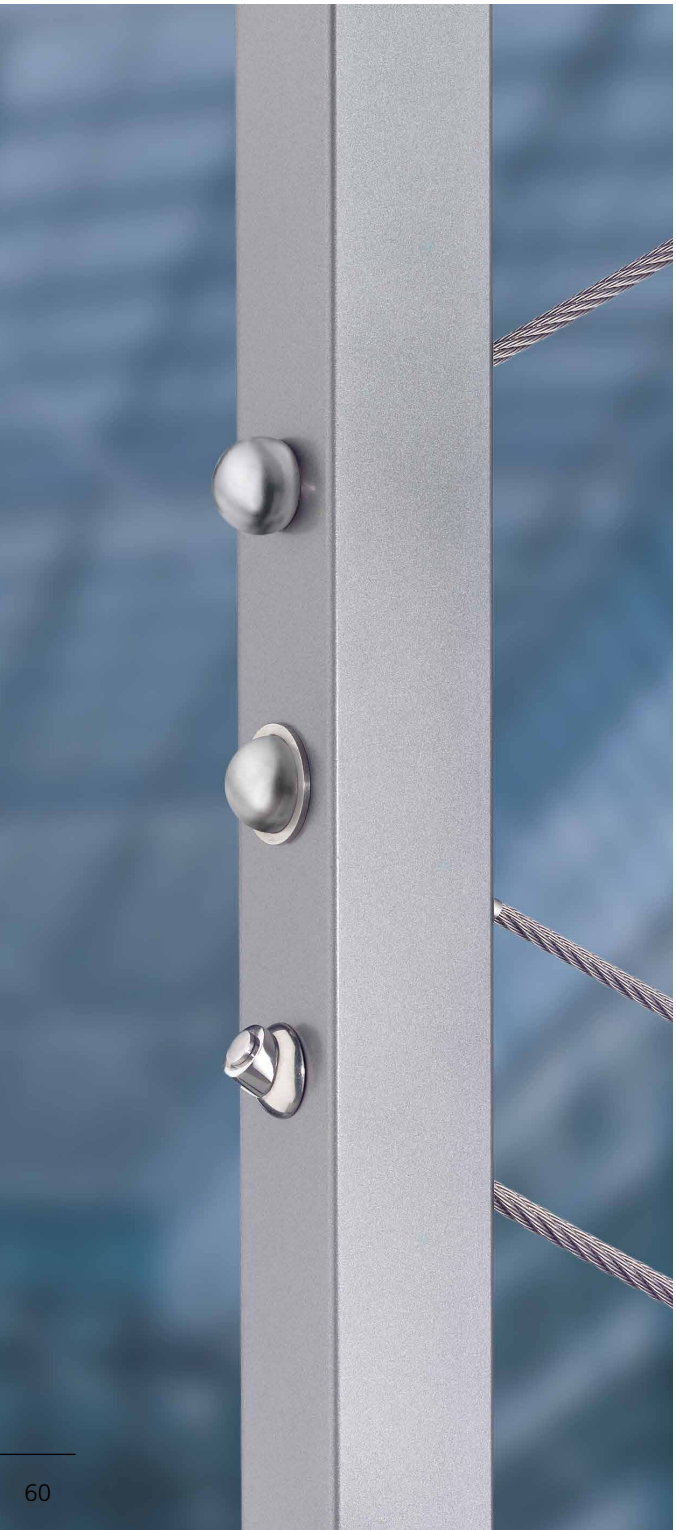

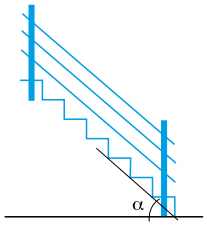

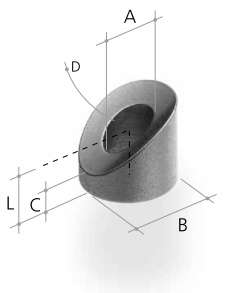

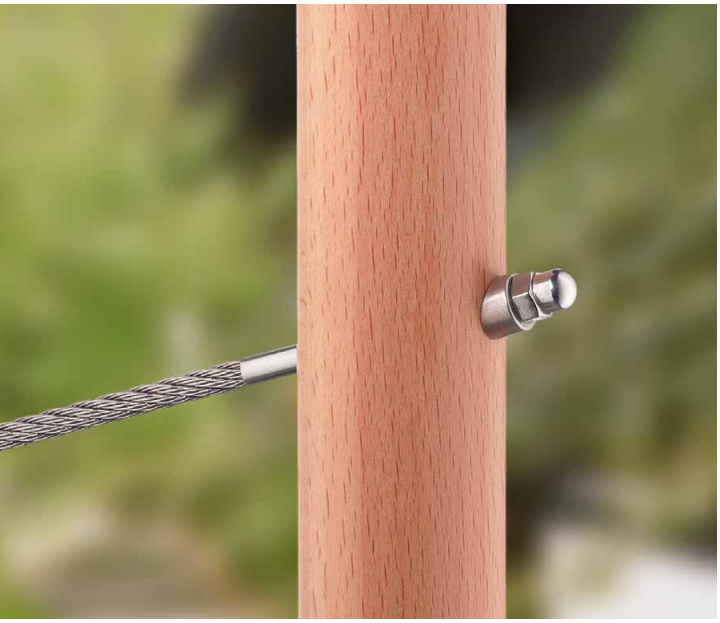

PROFILE CONNECTION for round profiles

item no.	for thread in mm	lead angle α	dimensions in mm A	B	C	D-ø	L
77755	M3-M5	0°	5,5	10	10	42,4	10,0
77416	M3-M5	20°	5,5	10	3	42,4	4,8
77418	M3-M5	30°	5,5	10	3	42,4	5,9
77419	M3-M5	35°	5,5	10	3	42,4	6,5
77420	M3-M5	40°	5,5	10	3	42,4	7,2
77421	M3-M5	45°	5,5	10	3	42,4	8,0
77422	M3-M5	50°	5,5	10	3	42,4	9,0
77423	M3-M5	55°	5,5	10	3	42,4	10,1
77756	M 6	0°	6,5	13	10	42,4	10,0
77424	M 6	20°	6,5	13	3	42,4	5,4
77425	M 6	25°	6,5	13	3	42,4	6,0
77426	M 6	30°	6,5	13	3	42,4	6,8
77427	M 6	35°	6,5	13	3	42,4	7,8
77428	M 6	40°	6,5	13	3	42,4	8,5
77429	M 6	45°	6,5	13	3	42,4	9,5
77430	M 6	50°	6,5	13	3	42,4	10,7
77431	M 6	55°	6,5	13	3	42,4	12,3
77432	M 8	20°	8,5	18	3	42,4	6,3
77433	M 8	25°	8,5	18	3	42,4	7,2
77434	M 8	30°	8,5	18	3	42,4	8,2
77435	M 8	35°	8,5	18	3	42,4	9,3
77436	M 8	40°	8,5	18	3	42,4	10,6
77437	M 8	45°	8,5	18	3	42,4	12,0
77439	M 8	55°	8,5	18	3	42,4	15,9
77442	M10	30°	10,5	22	3	42,4	9,4
77445	M10	45°	10,5	22	3	42,4	14,0
77446	M10	50°	10,5	22	3	42,4	16,1
77447	M10	55°	10,5	22	3	42,4	18,7

material: 1.4305 NOTE: Please state angle α with your order!

THREADED BALL

item no.	thread in mm A	dimensions in mm B	E	G	H
61386	M3	16	14,4	10	10
61387	M4	16	14,4	10	10
61388	M5	20	18,8	10	10
61389	M6	20	18,8	10	10
61390	M8	24	22,4	12	10
61391	M10	24	21,4	12	10

material: 1.4305

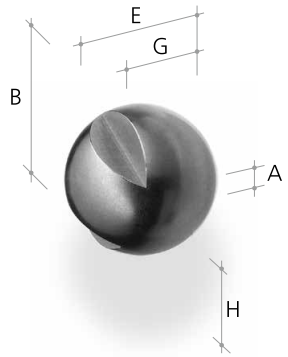

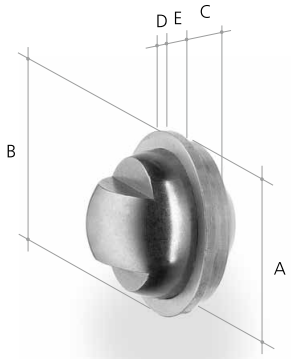

THREADED BALL WITH BEARING DISC

item no.	for thread in mm	dimensions in mm A	B	C	D	E	α max. degrees
60946	M3	17,9	21	4,2	1,5	2	45
60947	M4	17,9	21	4,2	1,5	2	45
60948	M5	21,9	25	2,0	1,5	3	45
60949	M6	21,9	25	2,0	1,5	3	45
60950	M8	25,9	29	1,6	1,5	4	45
60951	M10	25,9	29	2,6	1,5	4	35

material: 1.4305

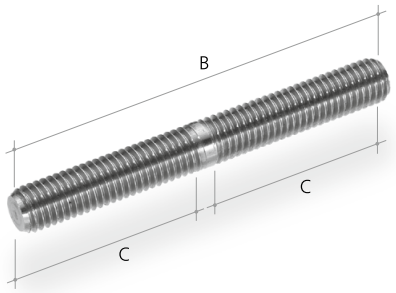

GRUB SCREW right- /left handed

item no. right-/ left-hand	thread in mm	dimensions in mm B	C
61146	M4	45	20
61147	M5	65	30
61148	M6	65	30
61149	M8	65	30
61150	M10	85	40
61151	M12	105	50
61153	M16	125	60
61154	M20	125	60

material: 1.4301

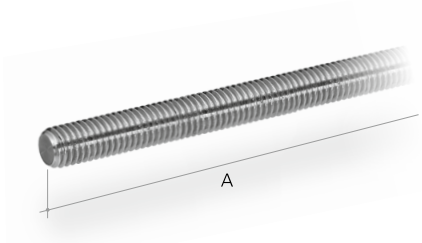

THREADED ROD

item no. right-hand	item no. left-hand	thread in mm	length in mm A
77785		M3	1000
77784	77792	M4	1000
77780	77793	M5	1000
77781	77794	M6	1000
77782	77795	M8	1000
77783	77796	M10	1000

material: 1.4301

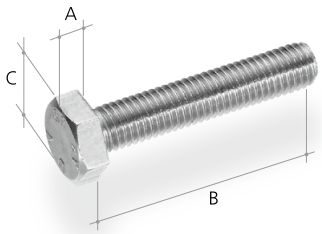

HEXAGON SCREW

item no.	thread in mm	dimensions in mm A	B	C
61106	M4	2,8	25	7
61107	M5	3,5	30	8
61108	M6	4,0	30	10
61109	M8	5,3	40	13
61110	M10	6,4	50	17
61111	M12	7,5	70	19
61113	M16	10,0	90	24
61114	M20	12,5	100	30

material: 1.4301

REDUCTION THREAD

item no. internal thread right-hand	item no. internal thread left-hand	internal thread in mm	external thread in mm	dimensions in mm A	B
61162	61163	M3	M8	10	1,5
61164	61165	M4	M8	10	1,5
61166	61167	M5	M10	12	1,5
61168	61169	M6	M10	12	1,5
61170	61171	M8	M12	15	1,5

material: 1.4301

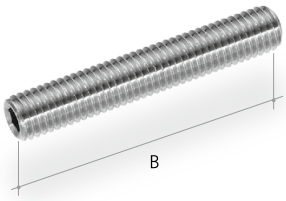

GRUB SCREW

item no. right-hand	item no. left-hand	thread in mm	dimensions in mm B
61128	61129	M4	30
61130	61131	M5	40
61132	61133	M6	40
61134	61135	M8	60
61136	61137	M10	60
61138	61139	M12	80
61142	61143	M16	80

material: 1.4301

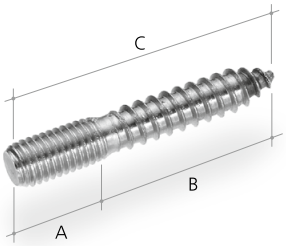

DOWEL SCREW WITH THREAD

item no. right-hand	item no. left-hand	thread in mm	dimensions in mm A	B	C
61156	61157	M5	20	30	50
61158	61159	M6	30	44	74
61160	61161	M8	40	60	100
61878		M10	30	40	70

material: 1.4301 other dimensions on request

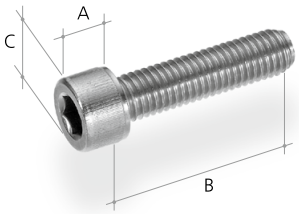

CAP SCREW

item no.	thread in mm	dimensions in mm A	B	C
61115	M4	4	25	7,0
61116	M5	5	25	8,5
61117	M6	6	30	10,0
61118	M8	8	35	13,0
61119	M10	10	40	16,0
61120	M12	12	50	18,0
61121	M16	16	60	24,0

material: 1.4301

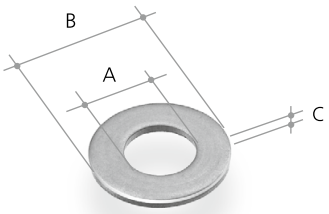

SUPPORT DISK

item no.	for thread in mm	dimensions in mm A	B	C
61398	M6	6,5	15	2

material: 1.4301

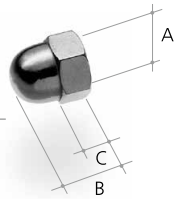

CUP NUT

item no.	thread in mm	dimensions in mm A	B	C
49368	M3	6	5,5	2,8
49369	M4	8	7,0	4,1
49370	M5	10	8,0	5,9
49240	M6	12	10,0	6,0
49241	M8	15	13,0	8,5
49242	M10	18	17,0	10,0
61306	M12	22	19,0	10,0
61308	M16	28	24,0	13,7
61309	M20	34	30,0	16,7

material: 1.4301

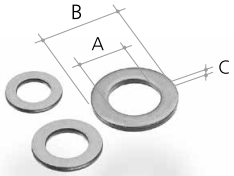

WASHER

item no.	thread in mm	dimensions in mm A	B	C
49371	M3	3,2	6	0,5
49372	M4	4,3	8	0,5
49373	M5	5,3	9	1,0
49374	M6	6,4	11	1,6
49375	M8	8,4	15	1,6
61301	M10	10,5	18	1,6
61302	M12	13,0	20	2,0
61304	M16	17,0	28	2,5
61305	M20	21,0	34	3,0

material: 1.4301

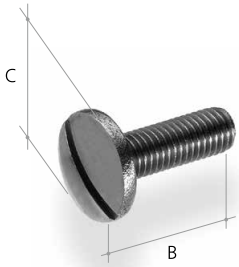

PAN HEAD SCREW

item no.	thread in mm	dimensions in mm B	C
61123	M4	25	10,0
61124	M5	30	12,5
61125	M6	30	14,0
61126	M8	30	17,0
61127	M10	30	23,0

material: 1.4301

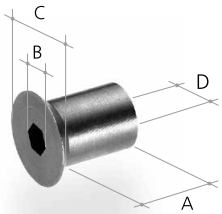

SLEEVE NUT

item no.	thread in mm	dimensions in mm A	B	C	D
63587	M5	15	3	10	6,6
63588	M6	16	4	12	8,0
63589	M8	16	5	16	11,0
63590	M10	20	6	20	14,0

material: 1.4301

HEXAGON NUT

item no. right-hand	item no. left-hand	thread in mm	dimensions in mm A	B
49396	49451	M3	2,4	5,5
49397	49452	M4	3,2	7,0
49398	49453	M5	4,0	8,0
39656	49454	M6	5,0	10,0
39659	49455	M8	6,5	13,0
61310	61311	M10	8,0	17,0
61312	61313	M12	10,0	19,0
61316	61317	M16	13,0	24,0
61320	61321	M20	16,0	30,0
61322	61323	M22	18,0	32,0
61324	61325	M24	19,0	36,0

material: 1.4301

WIRE ROPE CUTTER

item no.	suitable for rope in mm	length in mm	
07533	1-5	190 mm	
07534	6-12	500 mm	not shown

HYDRAULIC HAND PRESS

item no.	suitable for rope in mm
61182	1,6 - 6

for pressing alu-rope crimp sleeves / without dies

PRESS DIES

item no.	for rope ø in mm	type
61172	1,6 - 2	2
61173	2,6 - 3	3
61174	3,6 - 4	4
61175	4,1 - 5	5
61176	5,1 - 6	6

ALU-ROPE PRESS SLEEVES

item no.	for rope ø in mm
02082	1
02083	1,5
02084	2
02085	2,5
02086	3
02088	4
02090	5
02091	6

TIPS

In order to make sure that your dreams and visions come true, we invite you to use our experience of many years, our tips for application and, where required, our individual advice.

ROPE CONSTRUCTION

Wire ropes are made from cold-drawn wire with very good mechanical strength properties. Within a first step the single wires are spun around a centre wire to create a so called strand. In a second step, several strands are wrapped around a central core, thus forming the final rope.

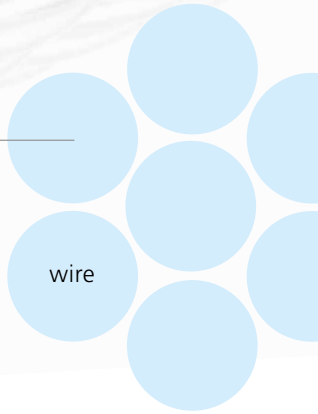

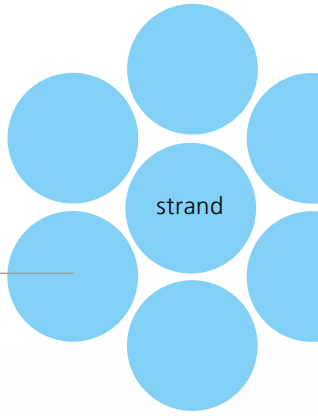

PROPERTIES

A high-strength and flexible wire rope can carry double the load of a stainless steel rod of equal diameter. In combination with various fittings the wire rope proves to be a very versatile constructional and design element. These high-strength properties remain permanent at working temperatures from -50°C up to 250°C.

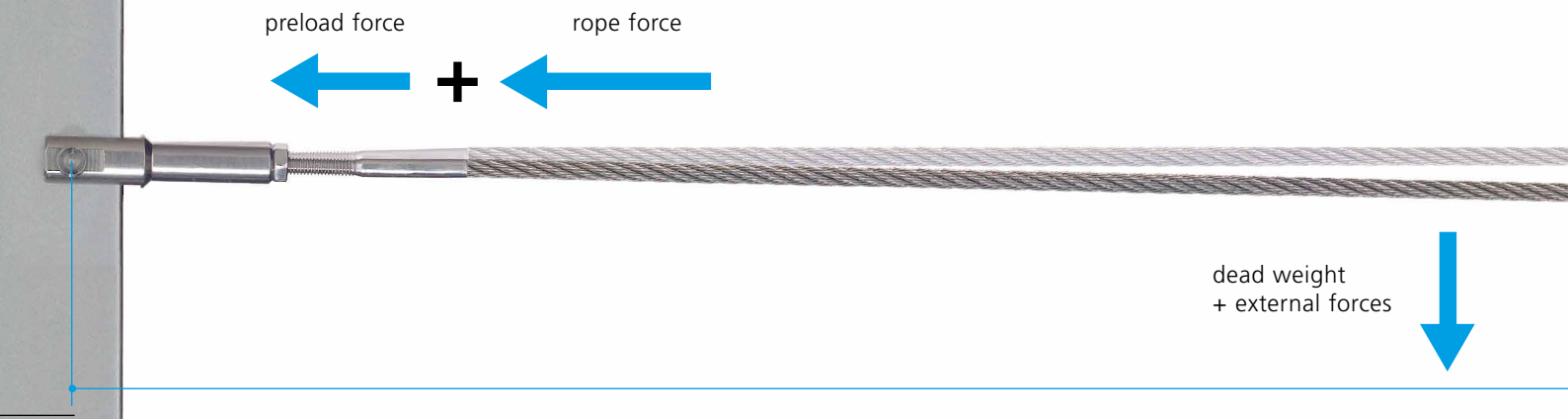

SAFETY

To guarantee the safety of a wire rope construction it is necessary to specify the effective strain which will be put on the wire rope and the fittings before selecting a specific rope-type and construction element. Functional reliability is ensured by a safety-factor: factor 2-3 for a static and factor >5 for a dynamic application.

WIRE SAG/PRELOAD FORCE

wire sag in % related to rope length	required preload force of wire in % of minimum tensile strength
0,5	75
1,0	38
2,0	19
3,0	13

WIRE FORCES

Wire force and preload force of wire combine to make up the effective total force of the rope. Very high rope forces are generated if vertical forces affect a rope that is suspended horizontally.

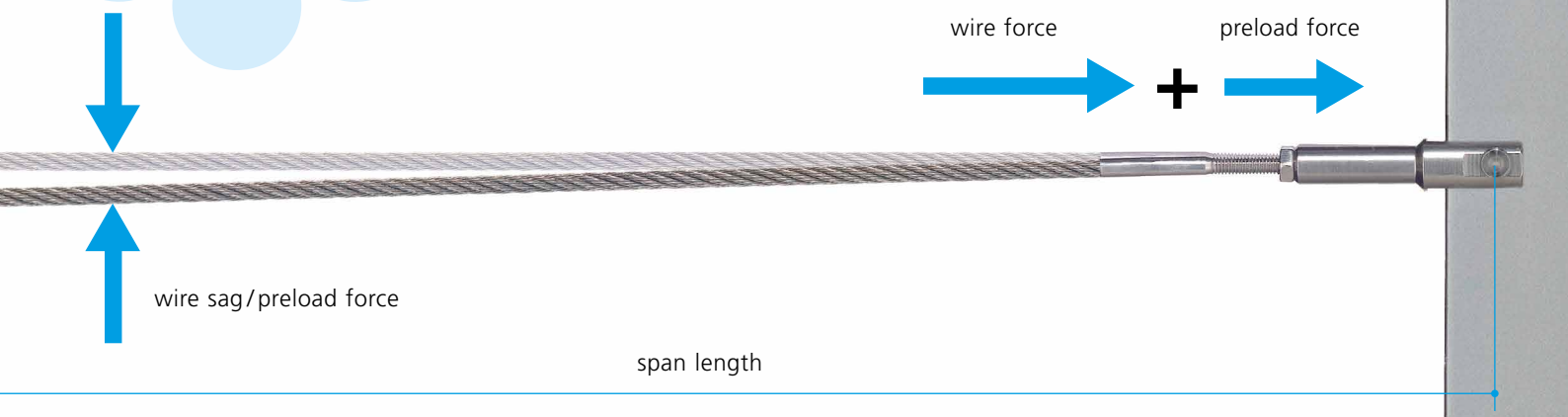

TENSIONING

Wire ropes are held by means of terminal joints. With the help of these joints the rope length can be varied and thus the rope be tensioned.

• tense

MAX. ALLOW. PRELOAD FORCES AND TIGHTENING TORQUES

for srews of property classes 5.8 (A2, A4)
at 90% utilsation of yield strength Rp0,2

thread in mm A	friction-factor	property classes acc. to ISO 898 / 1 max.preload-force F_V (N)	max. tightening-torque M_A (Ncm)
M2	0,100	540	17,0
	0,125	520	19,0
	0,140	500	21,5
M2,5	0,100	910	36,0
	0,125	860	39,0
	0,140	830	43,0
M3	0,100	1390	63,0
	0,125	1320	72,0
	0,140	1280	78,0
M3,5	0,100	1850	96,0
	0,125	1760	110,0
	0,140	1710	119,0
M4	0,100	2400	144,0
	0,125	2280	166,0
	0,140	2220	177,0
M5	0,100	3920	280,0
	0,125	3740	320,0
	0,140	3620	340,0
			M_A (Nm)
M6	0,100	5550	4,8
	0,125	5270	5,6
	0,140	5120	6,0
M8	0,100	10170	11,7
	0,125	9690	13,6
	0,140	9360	14,5
M10	0,100	16180	23,4
	0,125	15400	27,0
	0,140	14900	29,0
M12	0,100	23500	41,0
	0,125	22400	47,0
	0,140	21800	50,0
M14	0,100	32300	47,0
	0,125	30900	74,0
	0,140	30000	81,0
M16	0,100	44500	98,0
	0,125	42500	115,0
	0,140	41200	124,0

• right-hand thread

Effects of rope load on elongation of wire ropes (standard values)

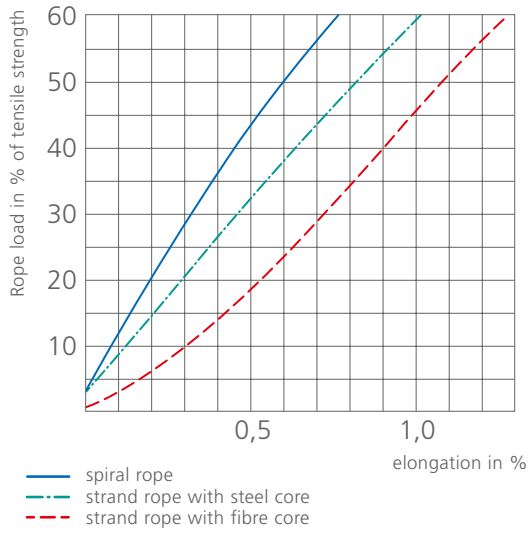

LEFT-HAND/RIGHT-HAND THREAD

Rope configurations with a right-hand/left-hand thread can be used in situations where it is not possible to tension the rope from outside. Here the process of tensing or releasing is effected by turning the entire rope confection.

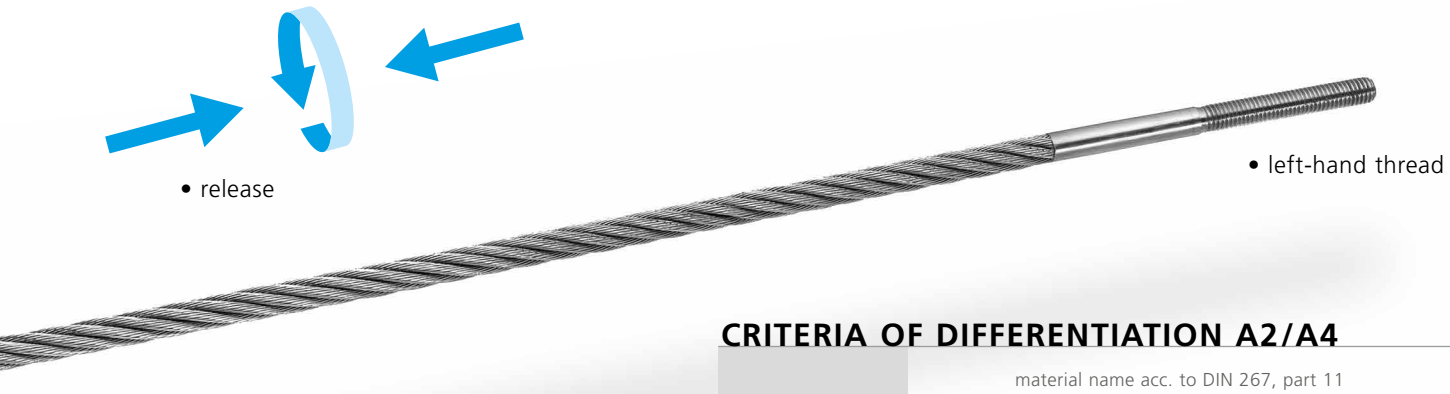

CRITERIA OF DIFFERENTIATION A2/A4

	material name acc. to DIN 267, part 11	
	A2	A4
material number	1.4301 1.4541	1.4401 1.4436
	1.4303 1.4305 1.4590	1.4404 1.4571
	1.4306 1.4550	1.4435 1.4580
properties	weather-proof	weather-proof
	acid-resistant	highly acid-resistant

We reserve the right to replace the material specified in the respective material grade number with a comparable material.

Dimensions are without obligation.

Subject to change without prior notice.

SAFETY LOCK

It is vital to secure the terminal joints to protect them from coming loose single-handedly. Several options to do this are available for passage borings:

- with liquid/chemical thread lock
- with lock washer or tooth wheel
- with counter nut
- with countered cap nut

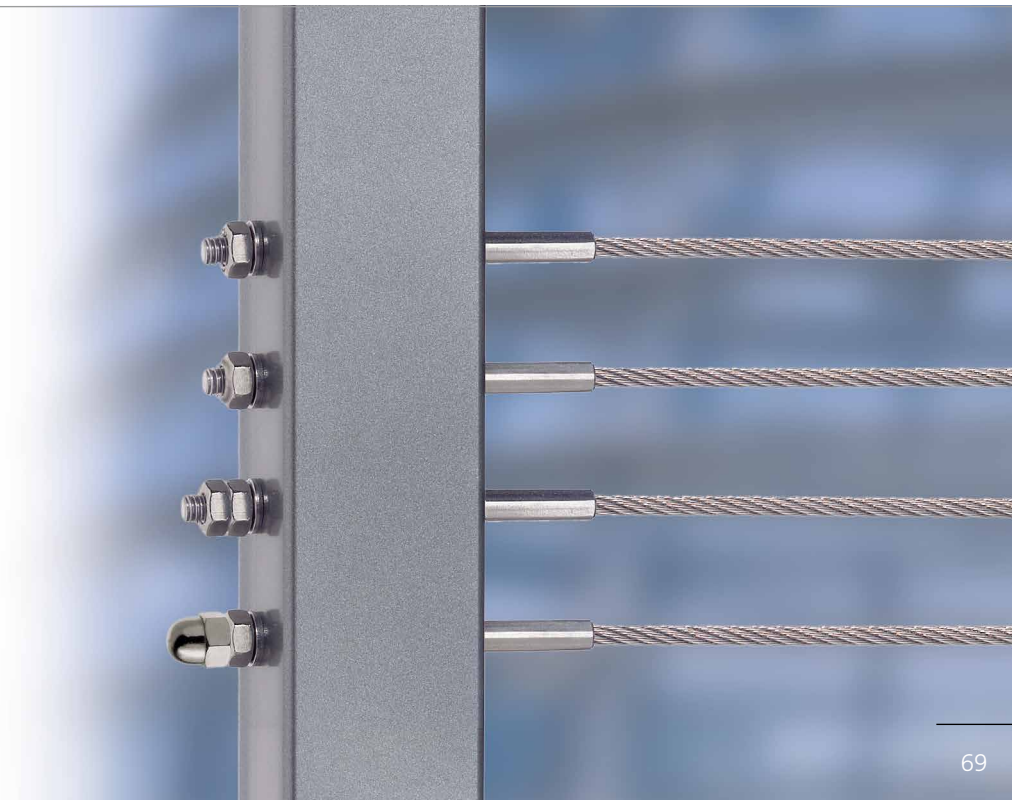

WIRE ROPES READY-MADE OR FOR SELF-ASSEMBLY

Generally we deliver wire ropes ready at length and complete with the corresponding fixtures. We specialise in this and keep all components in stock. Thus we are able to produce and deliver wire ropes fast, at a competitive price and in a high quality with guaranteed mechanical strength properties. Under normal conditions it poses no problem to decide on the required length of the confection. Nevertheless, exact planning is required.

The terminal ends for self assembly can be fastened to the wire rope by screwing or clamping. They enable a final adjustment on site. This may be beneficial for some applications, as it is possible to disconnect these fixings from the rope, if required. Attention should be paid to a careful assembly of the fixings onto the wire rope so the corresponding tractive forces can be guaranteed for.

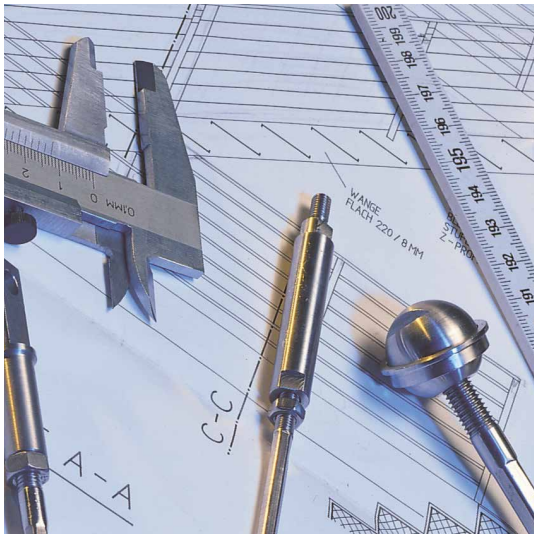

PLANING AND REALISATION

- Find out which rope lengths are needed. To avoid mistakes, it is a good idea to measure the required lengths on site.
- Order the ropes complete with the fittings of your choice – we are happy to give advice!
- We will deliver your goods within a few days. Each item will be tagged with a label indicating the length, number, diameter and, in some cases, the product name.
- To assemble, the rope should first be mounted at one end of the property. Then each rope can be pulled through further passages before it is fixed at the other end.
  Now you have to ensure the exact required preload force, which can be done easily using a torque spanner.
  Keep in mind that the effective rope forces (p. 68/69) have to be absorbed by the construction. The effective rope force has to match the minimum tensile strength the teminal ends can bear, in order to guarantee for an appropriate safety factor.
  Finally you have to secure the end-fittings against loosening to assure that the rope tension will be permanently maintained.

DEFINITIONS OF LENGTHS

EXTERNAL THREAD

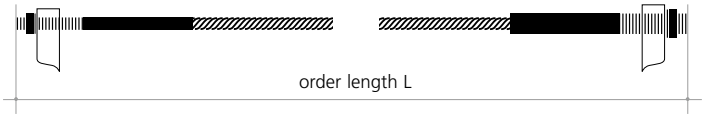

INTERNAL THREAD

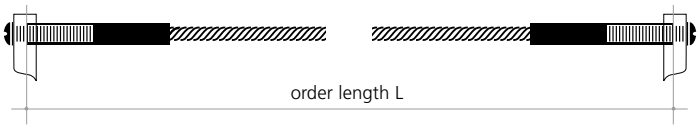

EXTERNAL THREAD
with profile connenction

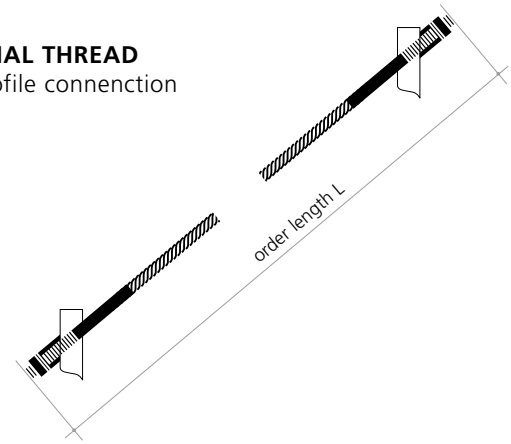

INTERNAL THREAD
with profile connenction

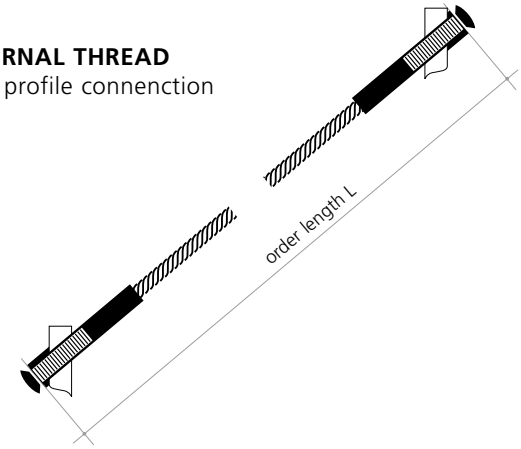

EXTERNAL THREAD FINE LINE

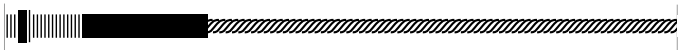

EXTERNAL THREAD hexagon swaged

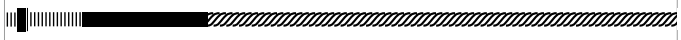

INTERNAL THREAD hexagon swaged

JAW hexagon swaged

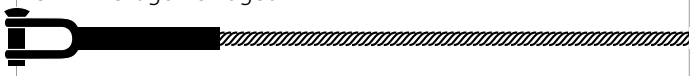

EYE hexagon swaged

PRESSING-ON SLEEVE

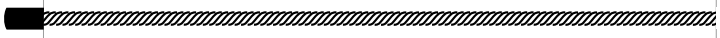

COUNTERSUNK HEAD FINE LINE

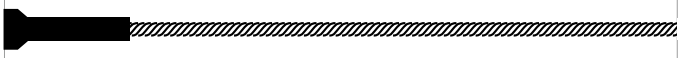

MECHANICAL THIMBLE SPLICE

THREADED BALL

EYE FINE with internal thread

JAW FINE with internal thread

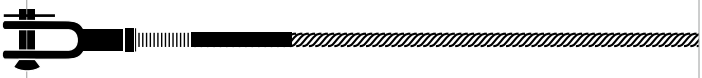

EYE with external thread

JAW with external thread / **TURNBUCKLE**

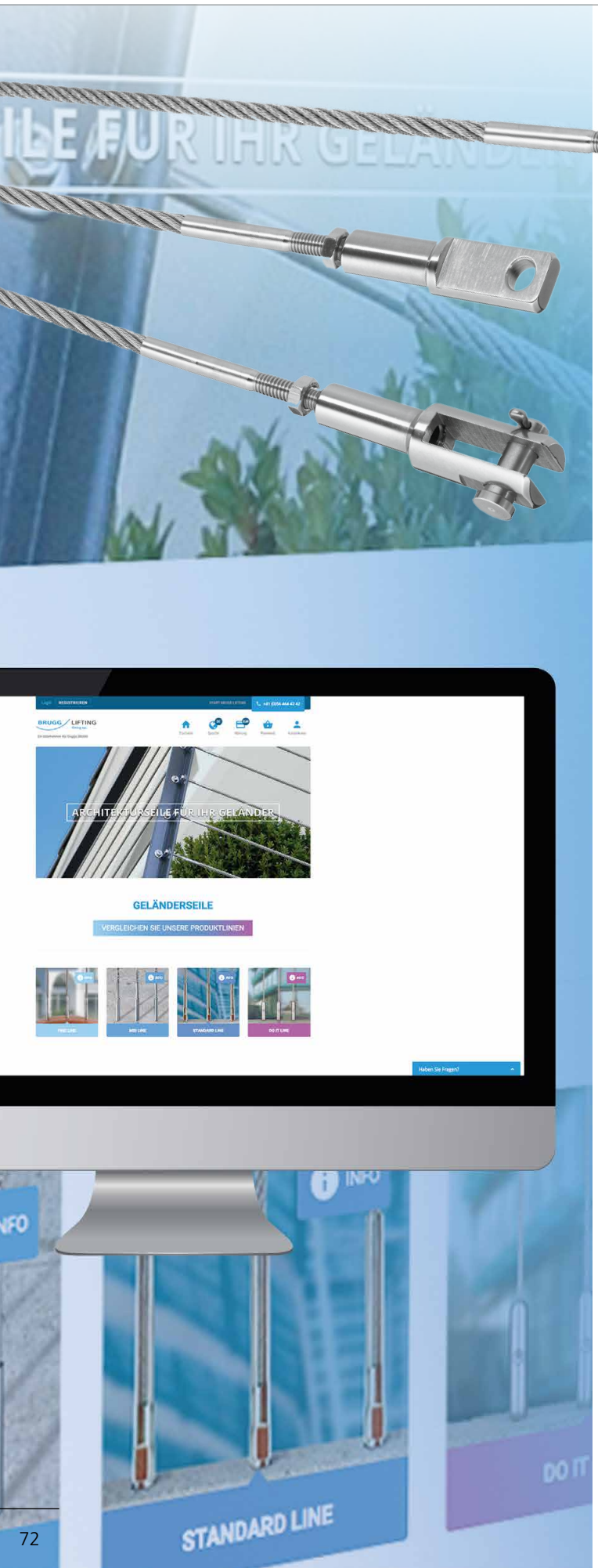

YOUR DESIRED CONFIGURATION. QUICKLY AND EASILY ASSEMBLED.

Visit bruggconfig.com and take just a few steps to select components from our product lines **FINE LINE, MID LINE, STANDARD LINE** and **DO IT LINE** to assemble your desired configuration. Solely matching parts can be combined with each other and thus will ensure error-free rope combinations.

The **COLLECTION** line offers you the option to select prefabricated configurations, which we have assembled for you.

For our façade greening system **DECO LINE**, we have developed two convenient configuration tools which make it easy for you to order your desired product.

You may of course also order individual parts and a wide range of accessories.

Our offer includes both direct orders from you and your possibility to request a proposal from us.

MAKE USE OF THESE BENEFITS

- Availability around the clock
- Images and data sheets of all parts
- Quick assembly of combinations
- Wide range of prefabricated configurations
- Instant guiding price offer

We hope that you enjoy shopping on our website!

bruggconfig.com

SWITZERLAND

BRUGG LIFTING (Headquarter)
Wydenstrasse 36
CH–5242 Birr
Phone +41 (0) 56 4 64 42 42
info.lifting@brugg.com
www.brugglifting.com

BRUGG LIFTING
Chemin de la Forêt 12
CH–1024 Ecublens
Phone +41 (0) 21 6 34 20 21
vente.lifting@brugg.com
www.brugglifting.com

A. SUTTO SA
Casella postale 246, Via Campagna
CH–6533 Lumino
Phone +41 (0) 91 910 24 00
alessandro@asutto.ch
www.asutto.ch

GERMANY

BRUGG LIFTING
Homeoffice

Phone +49 (0) 61 03 31 06 30
lifting.de@brugg.com
www.brugglifting.com

AUSTRIA

G. ASCHERL GMBH
Industriestrasse 43
A–6971 Hard
Phone +43 (0) 55 74 8 99 00-0
info@ascherl.at
www.ascherl.at

ITALY

C.P SISTEMI SRL
via Edmondo de amicis 63
I–20092 Cinisello Balsamo (MI)
Phone +39 (0) 2 660 41 017
info@cpsistemi.com
www. cpsistemi.com

FRANCE

All departments
except for the adjacent

BRUGG LIFTING
Chemin de la Forêt 12
CH–1024 Ecublens
Phone +41 (0) 21 6 34 20 21
vente.lifting@brugg.com
www.brugglifting.com

Departments
02, 08, 51, 55, 59, 60, 62, 76, 80

MEERT BVBA
Vijfhuizen 10
B–9420 Erpe-Mere
Phone +32 (0) 53 80 28 03
info@meert.be
www.meert.be

Departments
25, 39, 54, 57, 67, 68, 70, 88, 90

PROLEV SA
Parc d'activité du Rosenmeer
Zone sud
FR–67560 Rosheim
Phone +33 (0) 388 48 19 50
prolev@prolev.fr
www.prolev.fr

THE NETHERLANDS

LOUIS RUYS B. V.
De Zelling 15-17
NL–3342 Hendrik-Ido-Ambacht
Phone +31 (0) 78 684 94 94
info@louisruys.com
www.louisruys.nl

BELGIUM

MEERT BVBA
Vijfhuizen 10
B–9420 Erpe-Mere
Phone +32 (0) 53 80 28 03
info@meert.be
www.meert.be

POLAND

LINY STALOWE BRUGG
Artur Zielinski
Stobiec 14
P–82-103 Poczta Stegna
Phone +48 (0) 55 619 54 04
az@brugg.com.pl
www.brugg.com.pl

Edition 2020-01

Subject to alterations. Dimensions without obligations.

We reserve the right to replace the material specified in the respective material grade number with a comparable material.

No warrantee for misprints or errrors.

Photo page 5, buttom right: www.eisenzeit.de
Design & realisation: www.schaefer-design.com

www.brugglifting.com